REVISIONS				
ZONE	LTR	DESCRIPTION	DATE	APPROVED

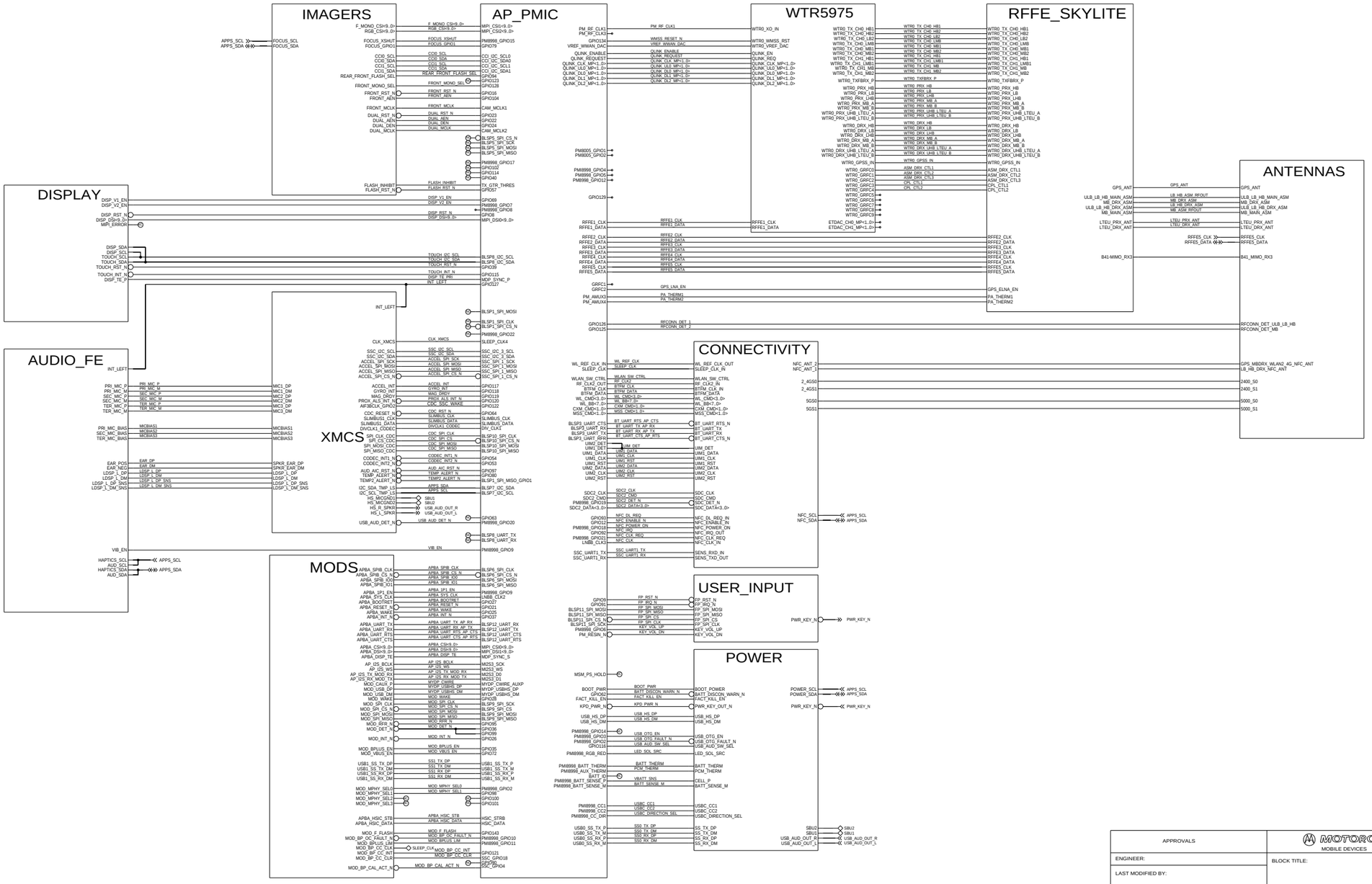

APPROVALS	MOTOROLA MOBILE DEVICES
ENGINEER:	BLOCK TITLE:
LAST MODIFIED BY:	
MOTOROLA CONFIDENTIAL RESTRICTED THE DRAWINGS ON THIS PRINT AND INFORMATION THEREWITH ARE PROPRIETARY TO MOTOROLA AND SHALL NOT BE USED OR DISCLOSED IN WHOLE OR IN PART WITHOUT MOTOROLA'S CONSENT. © COPYRIGHT, MOTOROLA. THIS DOES NOT IMPLY PUBLICATION	D PROJECT NAME / REV CAD FILE NAME:

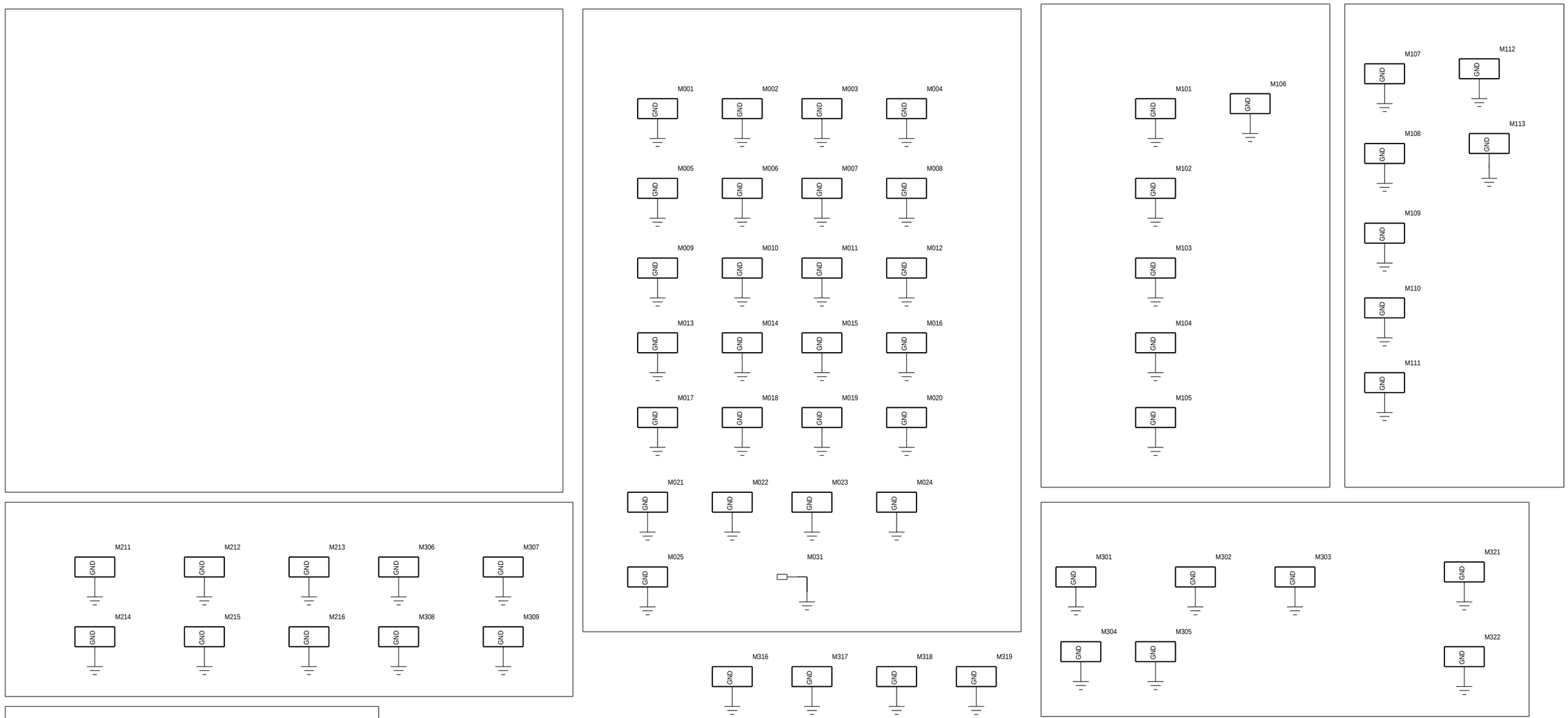

APPROVALS	MOTOROLA MOBILE DEVICES
ENGINEER:	BLOCK TITLE:
LAST MODIFIED BY:	
MOTOROLA CONFIDENTIAL RESTRICTED	B — PROJECT NAME — REV
THE DRAWING ON THIS PRINT AND INFORMATION THEREWITH ARE PROPRIETARY TO MOTOROLA AND SHALL NOT BE USED OR DISCUSSED IN WHOLE OR IN PART WITHOUT MOTOROLA'S CONSENT.	CAD FILE NAME:

© COPYRIGHT, MOTOROLA. THIS DOES NOT IMPLY PUBLICATION

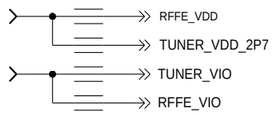

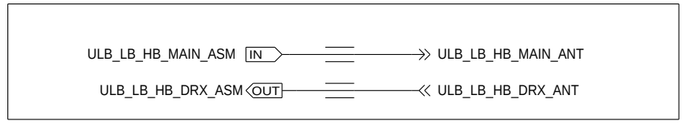

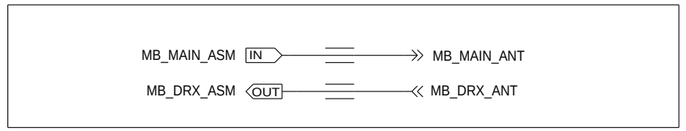

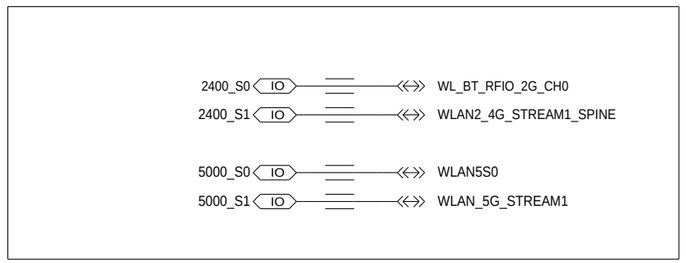

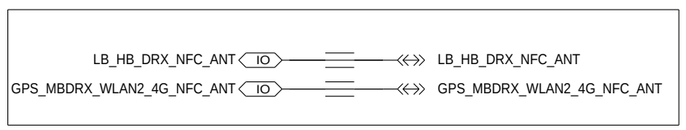

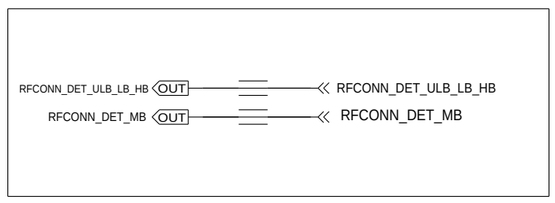

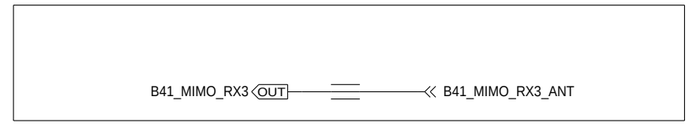

APPROVALS	MOTOROLA MOBILE DEVICES	
ENGINEER:	BLOCK TITLE:	
LAST MODIFIED BY:		
MOTOROLA CONFIDENTIAL RESTRICTED THE DRAWING ON THIS PRINT AND INFORMATION THEREWITH ARE PROPRIETARY TO MOTOROLA AND SHALL NOT BE USED OR DISCUSSED IN WHOLE OR IN PART WITHOUT MOTOROLA'S CONSENT. © COPYRIGHT, MOTOROLA. THIS DOES NOT IMPLY PUBLICATION	B PROJECT NAME	REV
	CAD FILE NAME:	

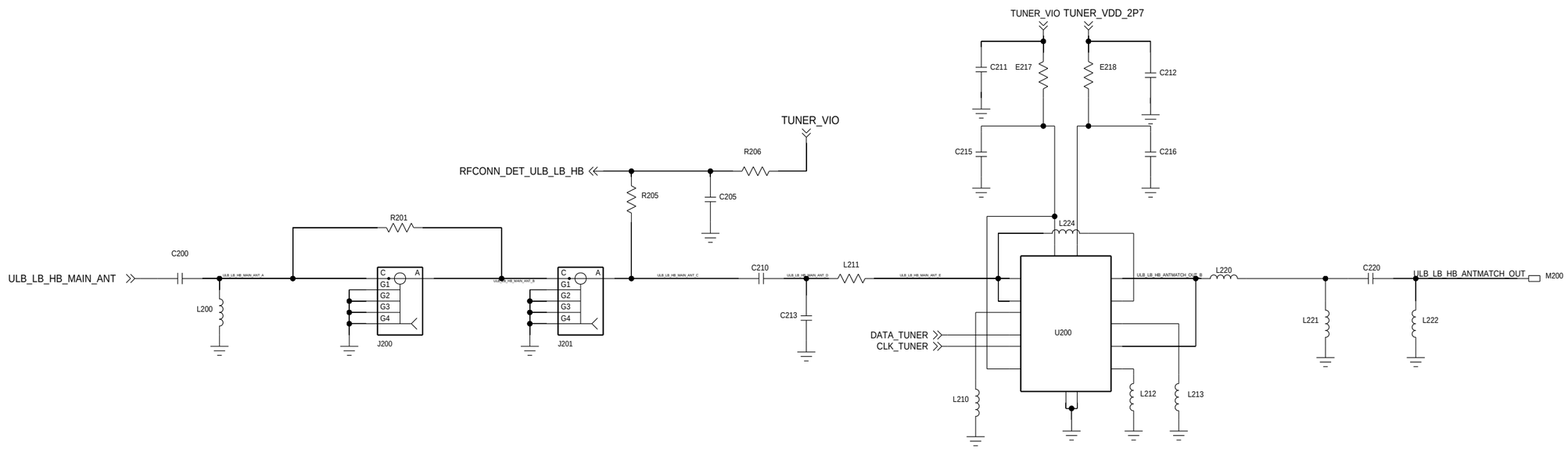

APPROVALS	MOTOROLA MOBILE DEVICES
ENGINEER:	BLOCK TITLE:
LAST MODIFIED BY:	
MOTOROLA CONFIDENTIAL RESTRICTED	B PROJECT NAME REV
THE DRAWING ON THIS PRINT AND INFORMATION THEREWITH ARE PROPRIETARY TO MOTOROLA AND SHALL NOT BE USED OR DISCUSSED IN WHOLE OR IN PART WITHOUT MOTOROLA'S CONSENT.	CAD FILE NAME:

© COPYRIGHT, MOTOROLA. THIS DOES NOT IMPLY PUBLICATION

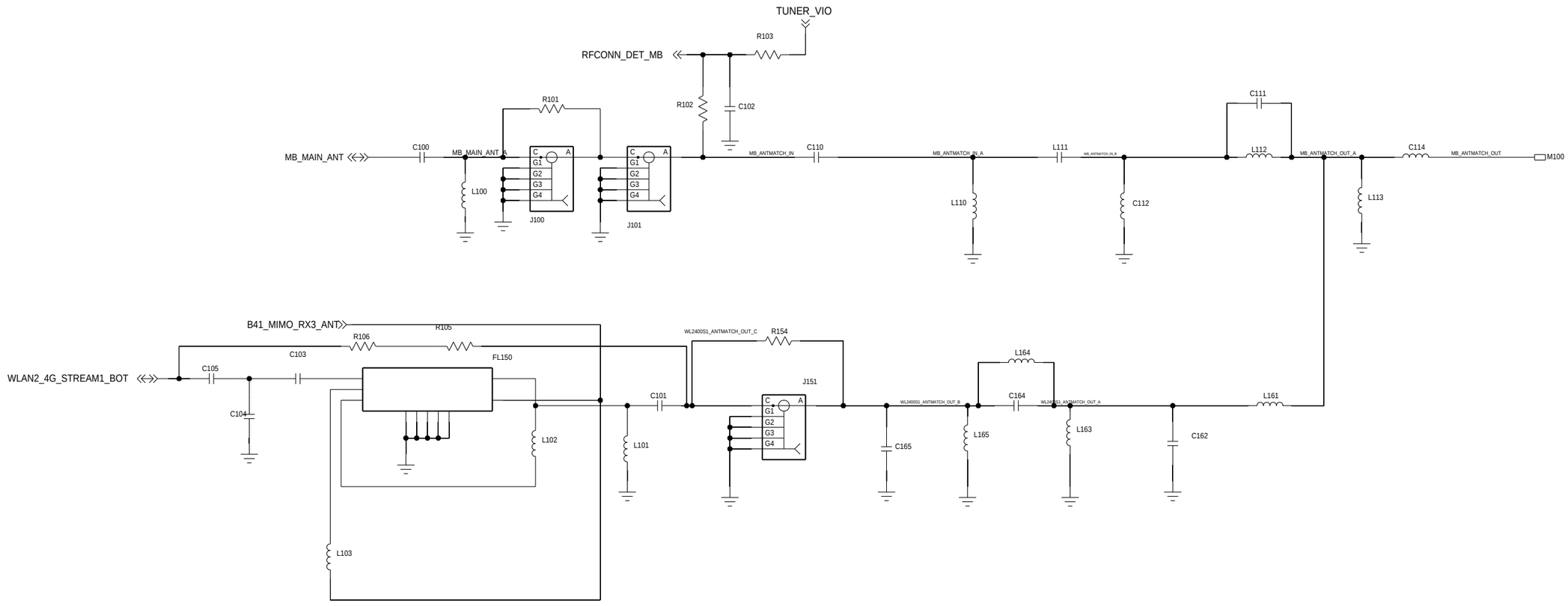

APPROVALS	MOTOROLA MOBILE DEVICES
ENGINEER:	BLOCK TITLE:
LAST MODIFIED BY:	
MOTOROLA CONFIDENTIAL RESTRICTED	B — PROJECT NAME — REV
THE DRAWING ON THIS PRINT AND INFORMATION THEREWITH ARE PROPRIETARY TO MOTOROLA AND SHALL NOT BE USED OR DISCUSSED IN WHOLE OR IN PART WITHOUT MOTOROLA'S CONSENT.	CAD FILE NAME:

© COPYRIGHT, MOTOROLA. THIS DOES NOT IMPLY PUBLICATION

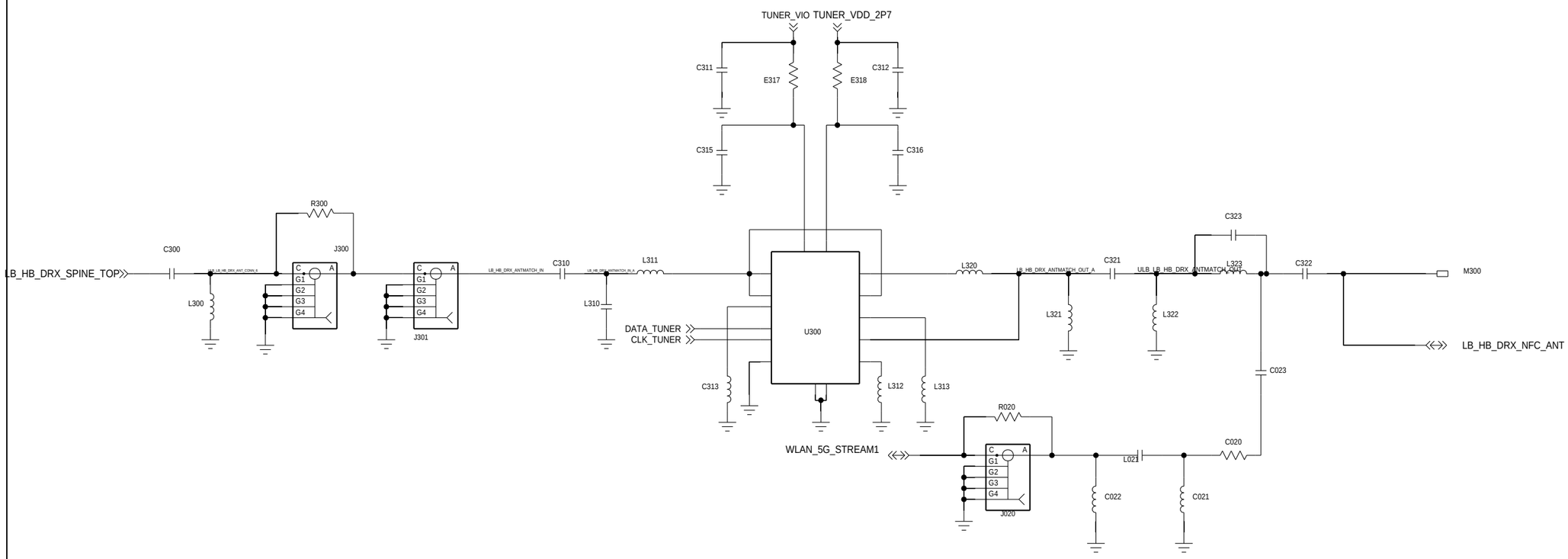

APPROVALS	MOTOROLA MOBILE DEVICES
ENGINEER:	BLOCK TITLE:
LAST MODIFIED BY:	
MOTOROLA CONFIDENTIAL RESTRICTED	B — PROJECT NAME — REV
THE DRAWING ON THIS PRINT AND INFORMATION THEREWITH ARE PROPRIETARY TO MOTOROLA AND SHALL NOT BE USED OR DISCUSSED IN WHOLE OR IN PART WITHOUT MOTOROLA'S CONSENT.	CAD FILE NAME:

© COPYRIGHT, MOTOROLA. THIS DOES NOT IMPLY PUBLICATION

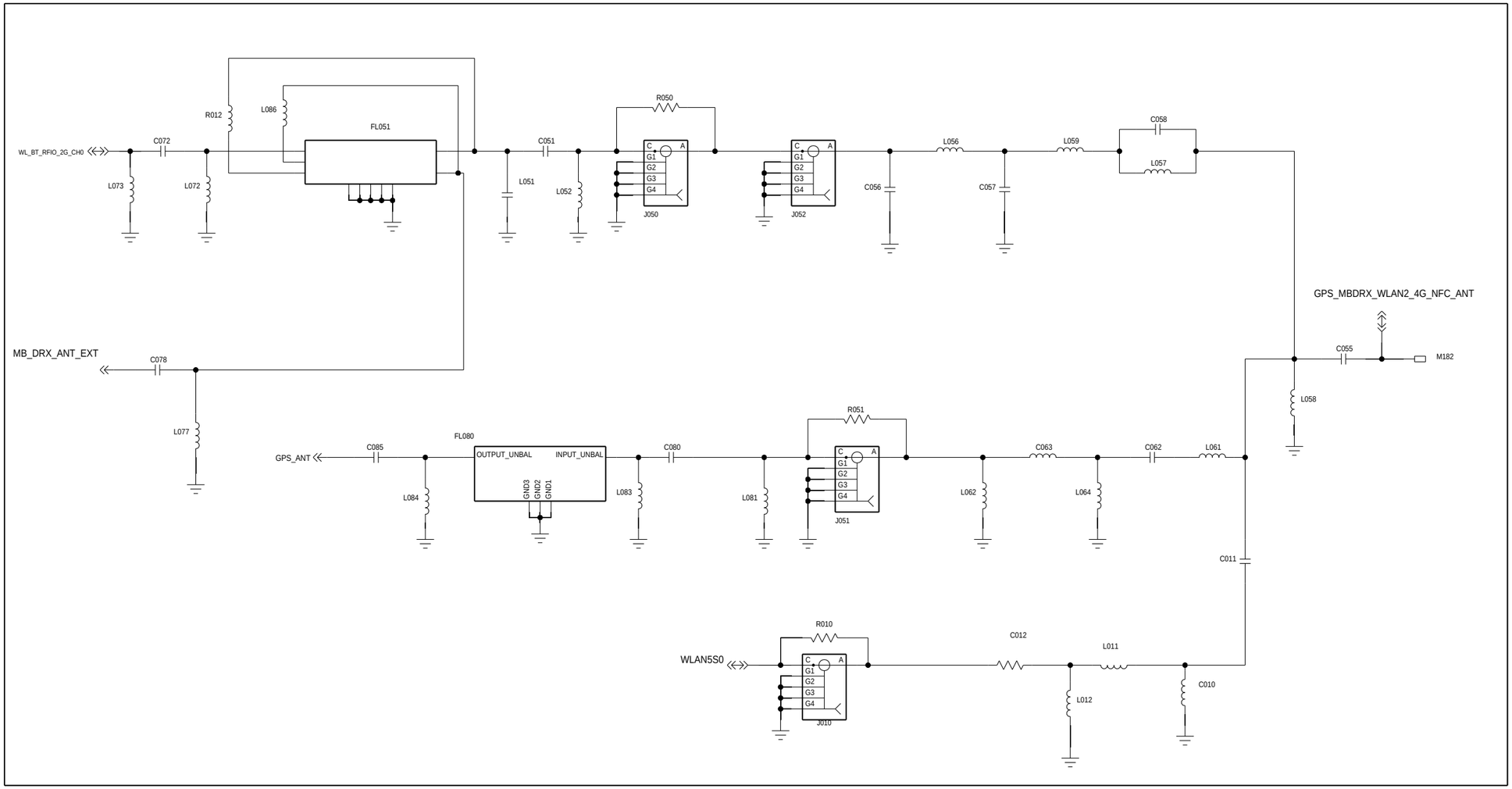

APPROVALS	MOTOROLA MOBILE DEVICES
ENGINEER:	BLOCK TITLE:
LAST MODIFIED BY:	
MOTOROLA CONFIDENTIAL RESTRICTED	B — PROJECT NAME — REV
THE DRAWING ON THIS PRINT AND INFORMATION THEREWITH ARE PROPRIETARY TO MOTOROLA AND SHALL NOT BE USED OR DISCUSSED IN WHOLE OR IN PART WITHOUT MOTOROLA'S CONSENT.	CAD FILE NAME:

© COPYRIGHT, MOTOROLA. THIS DOES NOT IMPLY PUBLICATION

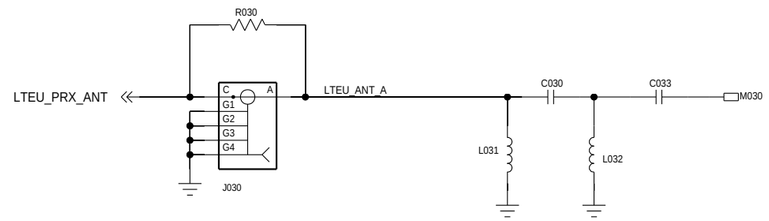

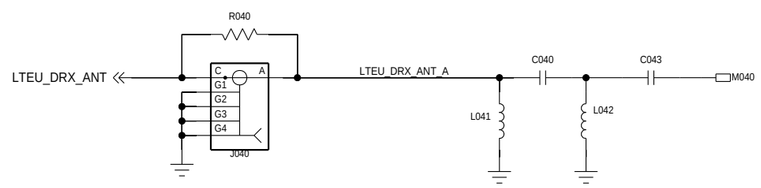

APPROVALS	MOTOROLA MOBILE DEVICES
ENGINEER:	BLOCK TITLE:
LAST MODIFIED BY:	
MOTOROLA CONFIDENTIAL RESTRICTED	B — PROJECT NAME — REV
THE DRAWING ON THIS PRINT AND INFORMATION THEREWITH ARE PROPRIETARY TO MOTOROLA AND SHALL NOT BE USED OR DISCUSSED IN WHOLE OR IN PART WITHOUT MOTOROLA'S CONSENT.	CAD FILE NAME:

© COPYRIGHT, MOTOROLA. THIS DOES NOT IMPLY PUBLICATION

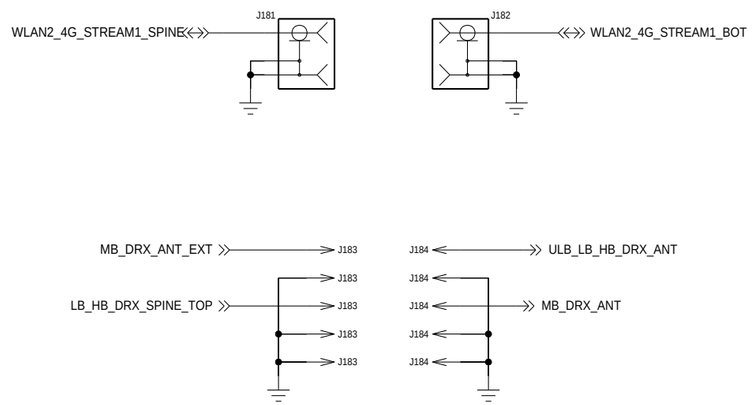

APPROVALS	MOTOROLA MOBILE DEVICES	
ENGINEER:	BLOCK TITLE:	
LAST MODIFIED BY:		
MOTOROLA CONFIDENTIAL RESTRICTED THE DRAWING ON THIS PRINT AND INFORMATION THEREWITH ARE PROPRIETARY TO MOTOROLA AND SHALL NOT BE USED OR DISCUSSED IN WHOLE OR IN PART WITHOUT MOTOROLA'S CONSENT. © COPYRIGHT, MOTOROLA. THIS DOES NOT IMPLY PUBLICATION	B PROJECT NAME	REV
	CAD FILE NAME:	

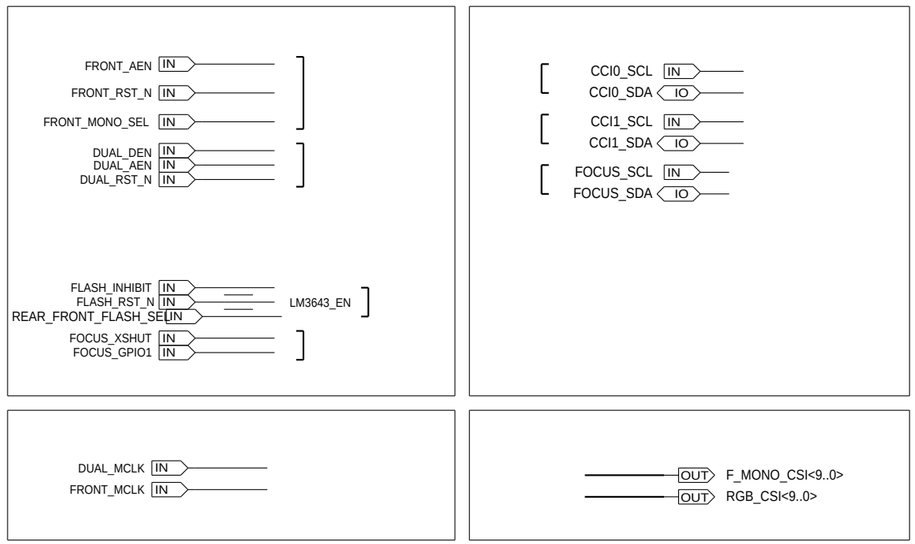

APPROVALS	MOTOROLA MOBILE DEVICES
ENGINEER:	BLOCK TITLE:
LAST MODIFIED BY:	
MOTOROLA CONFIDENTIAL RESTRICTED	B PROJECT NAME / REV
THE DRAWING ON THIS PRINT AND INFORMATION THEREWITH ARE PROPRIETARY TO MOTOROLA AND SHALL NOT BE USED OR DISCUSSED IN WHOLE OR IN PART WITHOUT MOTOROLA'S CONSENT.	CAD FILE NAME:

© COPYRIGHT, MOTOROLA. THIS DOES NOT IMPLY PUBLICATION

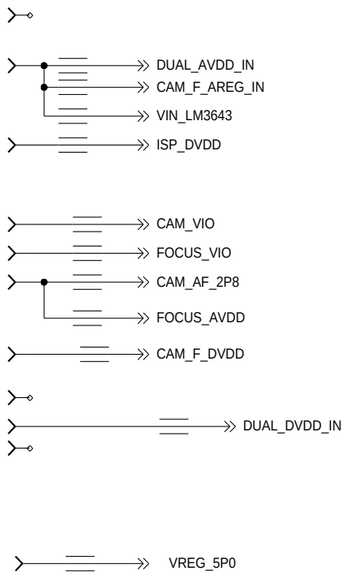

APPROVALS	MOTOROLA MOBILE DEVICES
ENGINEER:	BLOCK TITLE:
LAST MODIFIED BY:	
MOTOROLA CONFIDENTIAL RESTRICTED	B PROJECT NAME / REV
	CAD FILE NAME:

THE DRAWING ON THIS PRINT AND INFORMATION THEREWITH ARE PROPRIETARY TO MOTOROLA AND SHALL NOT BE USED OR DISCUSSED IN WHOLE OR IN PART WITHOUT MOTOROLA'S CONSENT.
© COPYRIGHT, MOTOROLA. THIS DOES NOT IMPLY PUBLICATION

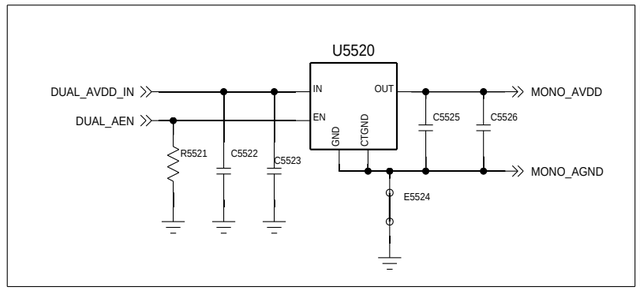

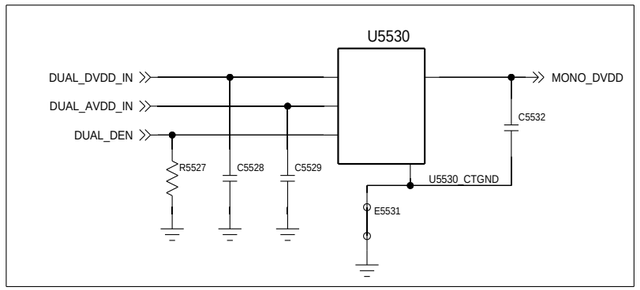

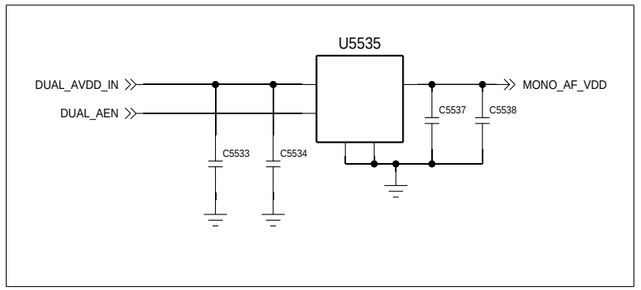

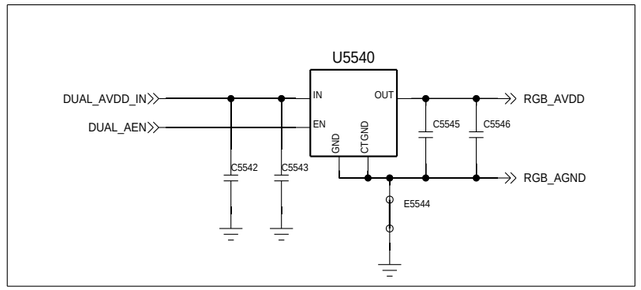

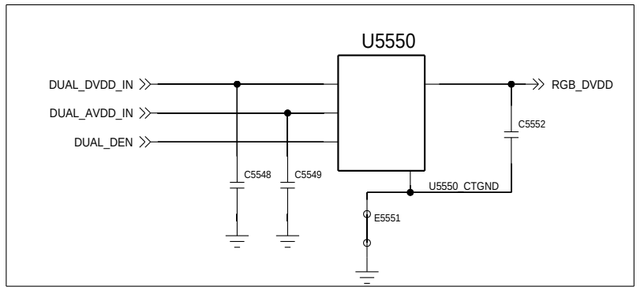

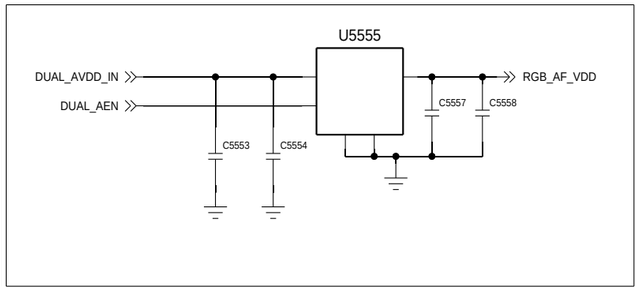

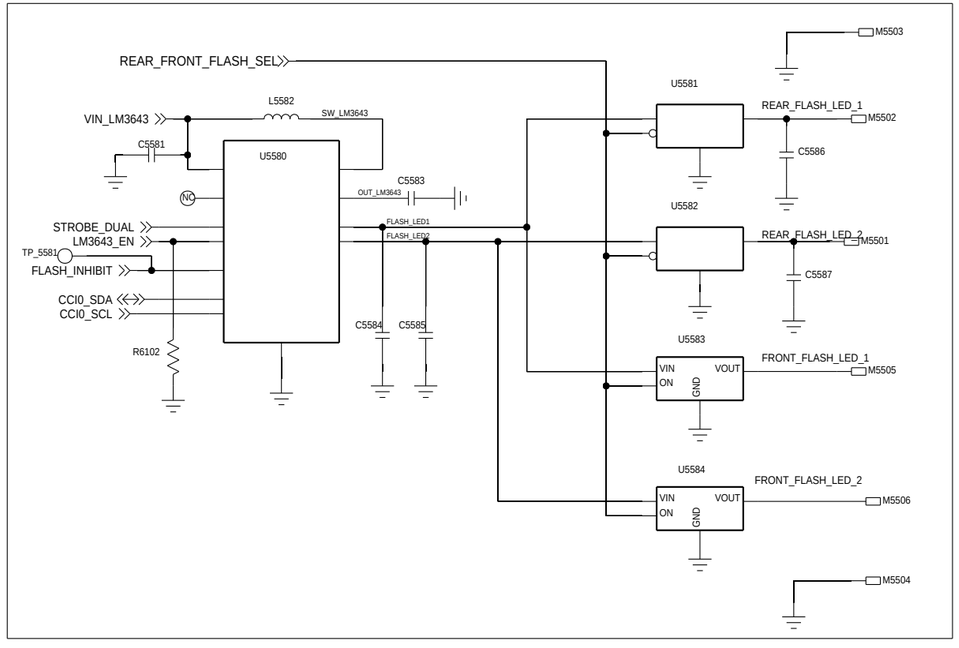

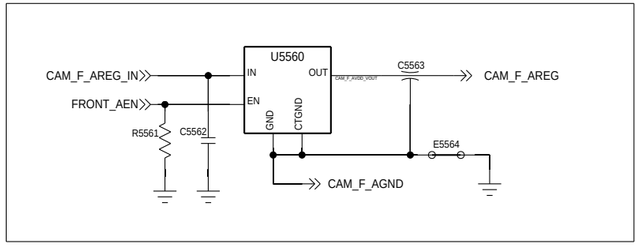

APPROVALS	MOTOROLA MOBILE DEVICES	
ENGINEER:	BLOCK TITLE:	
LAST MODIFIED BY:		
MOTOROLA CONFIDENTIAL RESTRICTED	B PROJECT NAME	REV
	CAD FILE NAME:	

THE DRAWING ON THIS PRINT AND INFORMATION THEREWITH ARE PROPRIETARY TO MOTOROLA AND SHALL NOT BE USED OR DISCUSSED IN WHOLE OR IN PART WITHOUT MOTOROLA'S CONSENT.
© COPYRIGHT, MOTOROLA. THIS DOES NOT IMPLY PUBLICATION

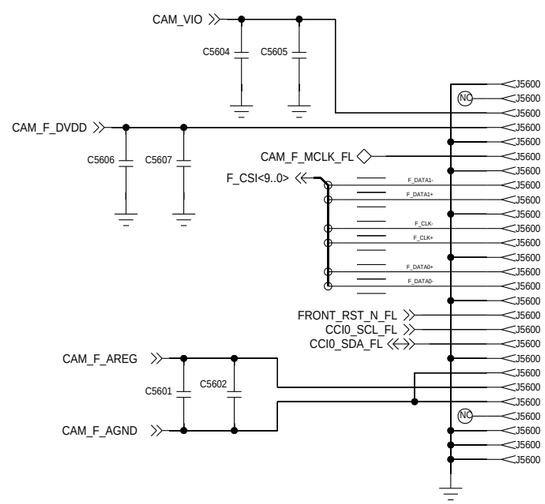

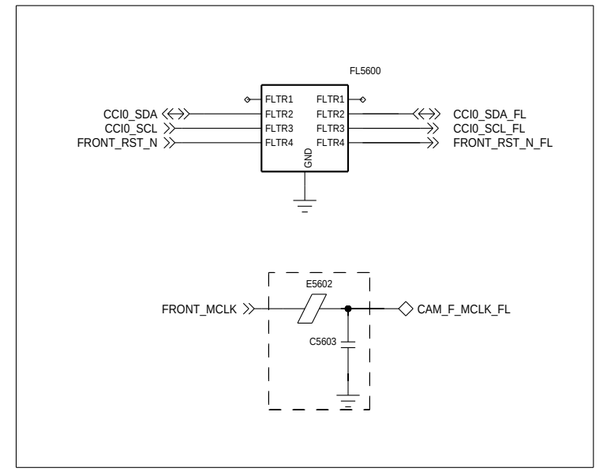

APPROVALS	MOTOROLA MOBILE DEVICES	
ENGINEER:	BLOCK TITLE:	
LAST MODIFIED BY:		
MOTOROLA CONFIDENTIAL RESTRICTED	B PROJECT NAME	REV
THE DRAWING ON THIS PRINT AND INFORMATION THEREWITH ARE PROPRIETARY TO MOTOROLA AND SHALL NOT BE USED OR DISCUSSED IN WHOLE OR IN PART WITHOUT MOTOROLA'S CONSENT.	CAD FILE NAME:	

© COPYRIGHT, MOTOROLA. THIS DOES NOT IMPLY PUBLICATION

APPROVALS	MOTOROLA MOBILE DEVICES
ENGINEER:	BLOCK TITLE:
LAST MODIFIED BY:	
MOTOROLA CONFIDENTIAL RESTRICTED	B PROJECT NAME / REV
	CAD FILE NAME:

THE DRAWING ON THIS PRINT AND INFORMATION
THEREWITH ARE PROPRIETARY TO MOTOROLA AND
SHALL NOT BE USED OR DISCUSSED IN WHOLE
OR IN PART WITHOUT MOTOROLA'S CONSENT.
© COPYRIGHT, MOTOROLA. THIS DOES
NOT IMPLY PUBLICATION

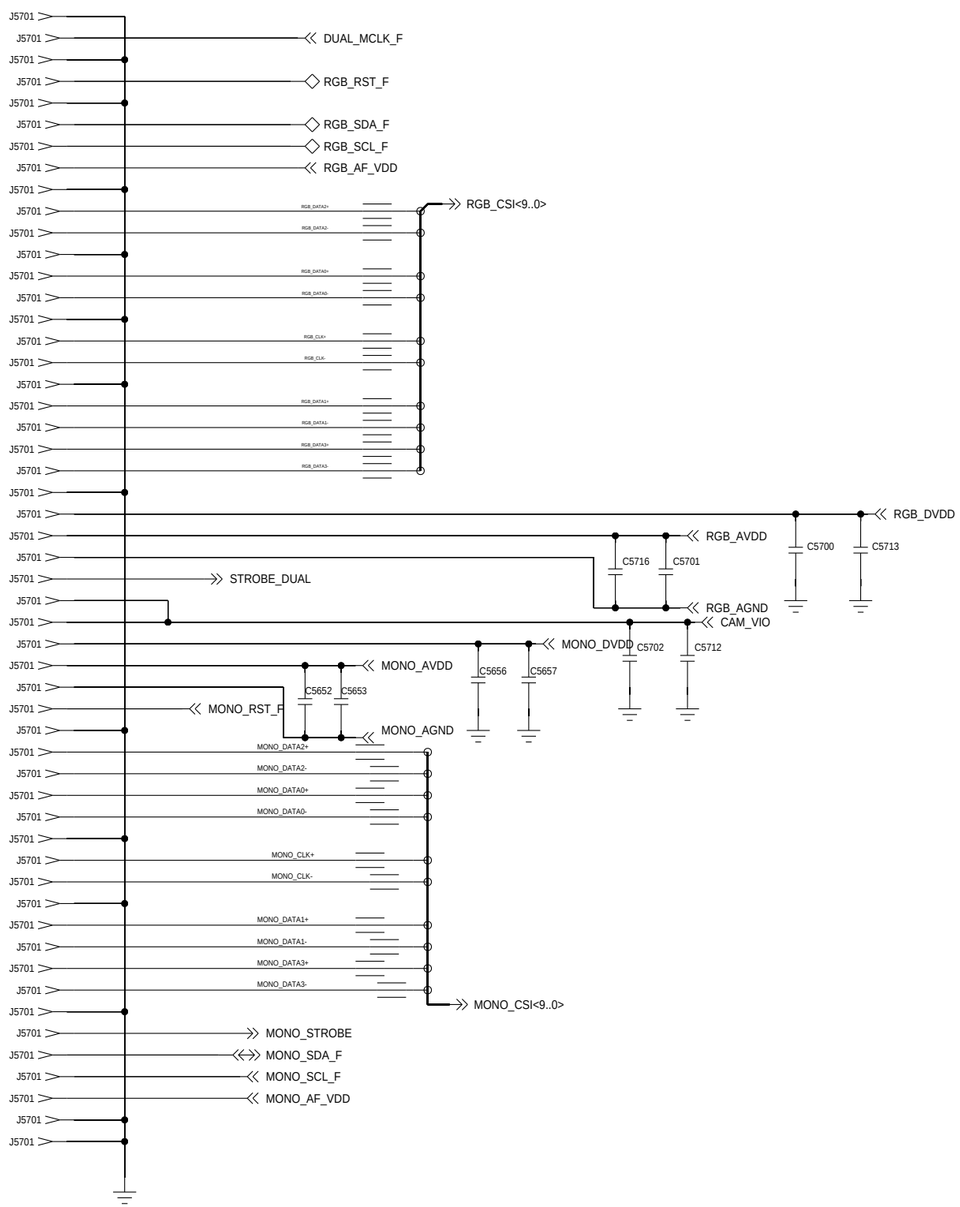

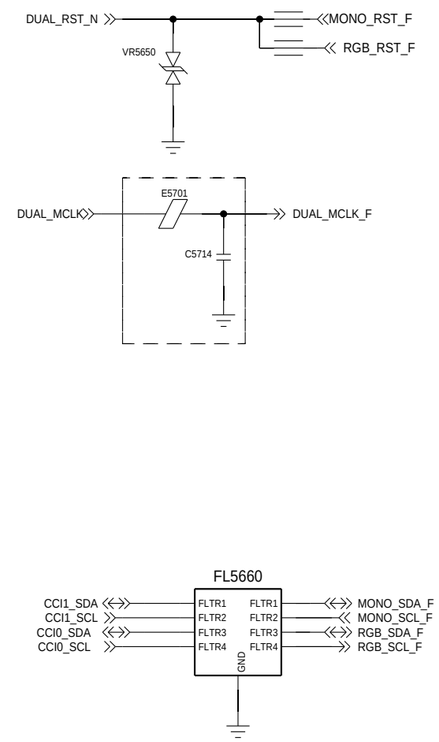

APPROVALS	MOTOROLA MOBILE DEVICES
ENGINEER:	BLOCK TITLE:
LAST MODIFIED BY:	
MOTOROLA CONFIDENTIAL RESTRICTED	B — PROJECT NAME — REV
THE DRAWING ON THIS PRINT AND INFORMATION THEREWITH ARE PROPRIETARY TO MOTOROLA AND SHALL NOT BE USED OR DISCUSSED IN WHOLE OR IN PART WITHOUT MOTOROLA'S CONSENT.	CAD FILE NAME:

© COPYRIGHT, MOTOROLA. THIS DOES NOT IMPLY PUBLICATION

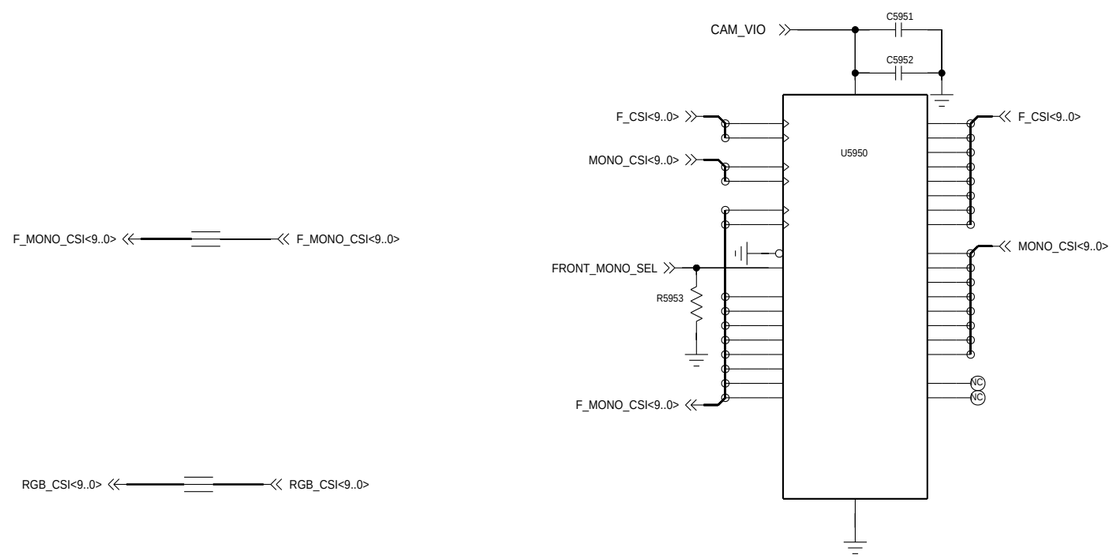

APPROVALS	MOTOROLA MOBILE DEVICES	
ENGINEER:	BLOCK TITLE:	
LAST MODIFIED BY:		
MOTOROLA CONFIDENTIAL RESTRICTED	B PROJECT NAME	REV
THE DRAWING ON THIS PRINT AND INFORMATION THEREWITH ARE PROPRIETARY TO MOTOROLA AND SHALL NOT BE USED OR DISCUSSED IN WHOLE OR IN PART WITHOUT MOTOROLA'S CONSENT.	CAD FILE NAME:	

© COPYRIGHT, MOTOROLA. THIS DOES NOT IMPLY PUBLICATION

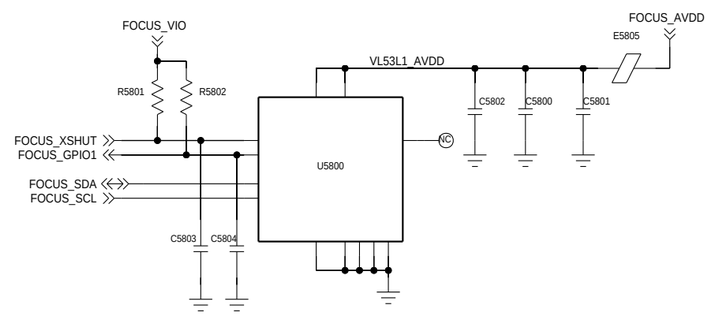

APPROVALS	MOTOROLA MOBILE DEVICES
ENGINEER:	BLOCK TITLE:
LAST MODIFIED BY:	
MOTOROLA CONFIDENTIAL RESTRICTED	B PROJECT NAME REV
THE DRAWING ON THIS PRINT AND INFORMATION THEREWITH ARE PROPRIETARY TO MOTOROLA AND SHALL NOT BE USED OR DISCUSSED IN WHOLE OR IN PART WITHOUT MOTOROLA'S CONSENT.	CAD FILE NAME:

© COPYRIGHT, MOTOROLA. THIS DOES NOT IMPLY PUBLICATION

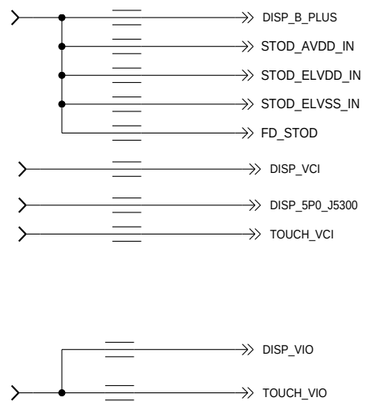

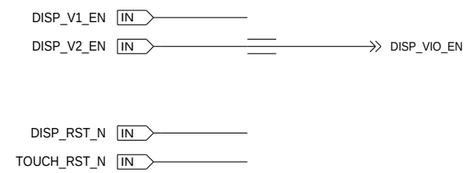

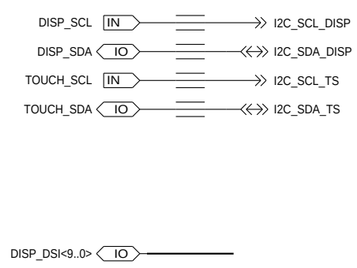

APPROVALS	MOTOROLA MOBILE DEVICES	
ENGINEER:	BLOCK TITLE:	
LAST MODIFIED BY:		
MOTOROLA CONFIDENTIAL RESTRICTED	B PROJECT NAME	REV
	CAD FILE NAME:	

THE DRAWING ON THIS PRINT AND INFORMATION THEREWITH ARE PROPRIETARY TO MOTOROLA AND SHALL NOT BE USED OR DISCUSSED IN WHOLE OR IN PART WITHOUT MOTOROLA'S CONSENT.
© COPYRIGHT, MOTOROLA. THIS DOES NOT IMPLY PUBLICATION

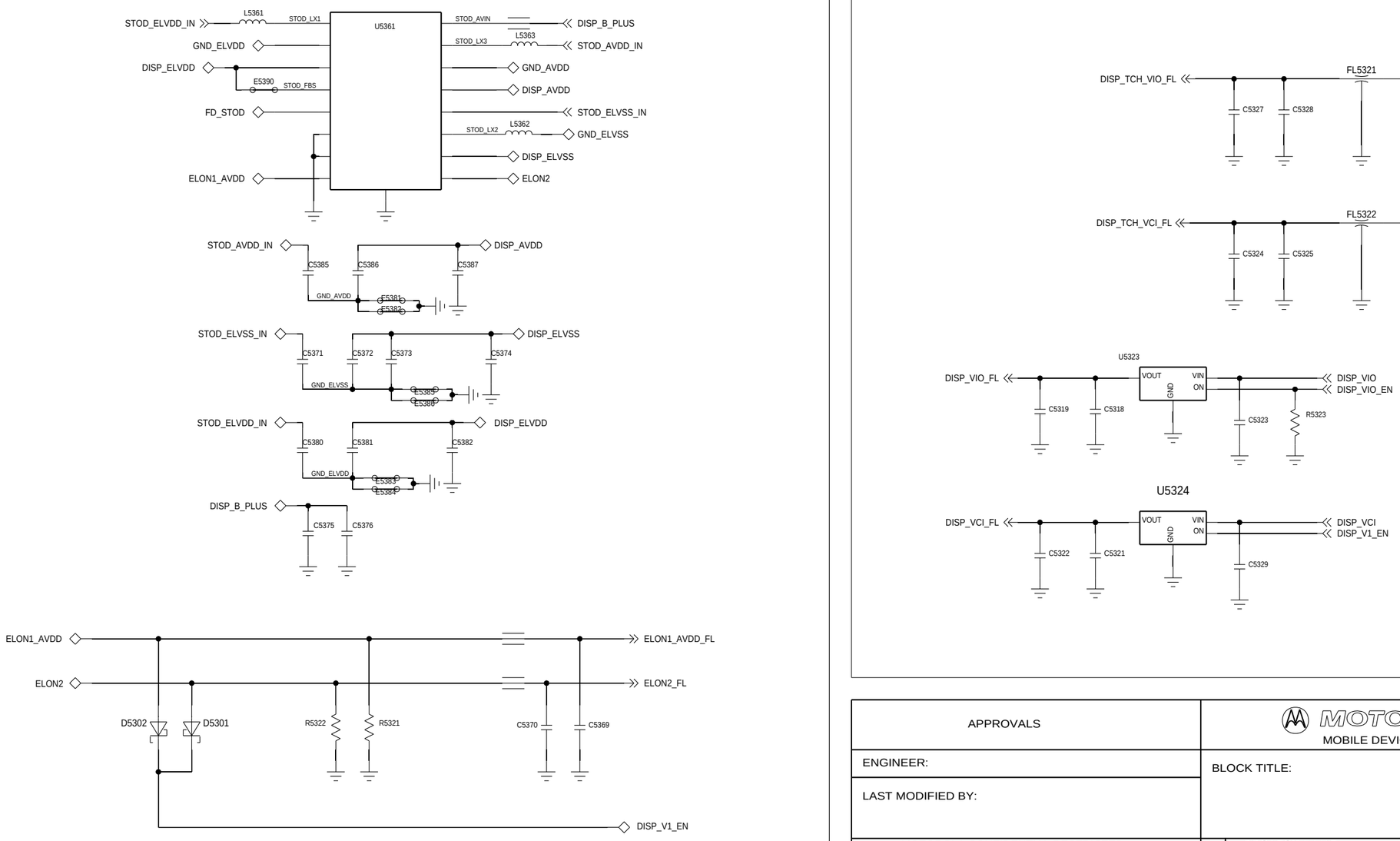

APPROVALS	MOTOROLA MOBILE DEVICES
ENGINEER:	BLOCK TITLE:
LAST MODIFIED BY:	

MOTOROLA CONFIDENTIAL RESTRICTED

THE DRAWING ON THIS PRINT AND INFORMATION THEREWITH ARE PROPRIETARY TO MOTOROLA AND SHALL NOT BE USED OR DISCUSSED IN WHOLE OR IN PART WITHOUT MOTOROLA'S CONSENT.
© COPYRIGHT, MOTOROLA. THIS DOES NOT IMPLY PUBLICATION

B	PROJECT NAME	REV
CAD FILE NAME:		

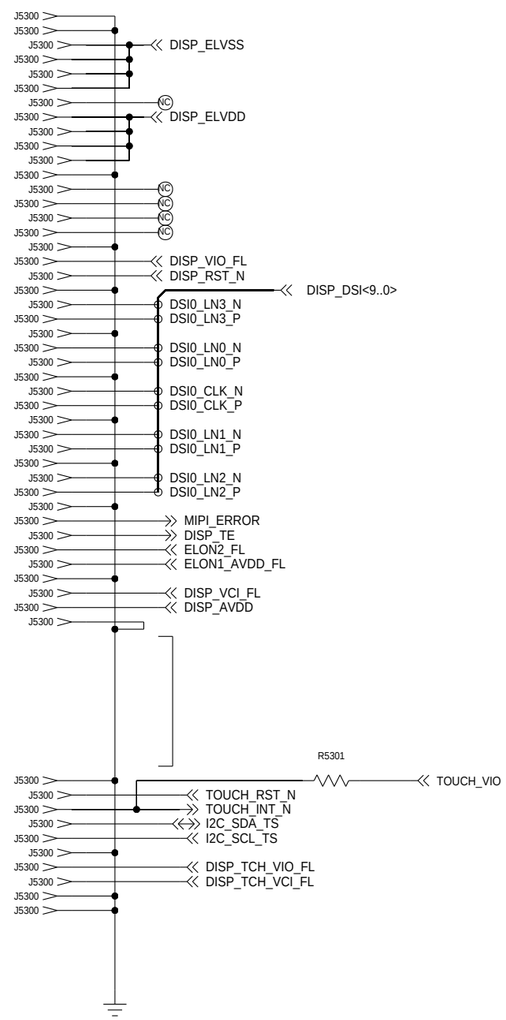

APPROVALS	MOTOROLA MOBILE DEVICES	
ENGINEER:	BLOCK TITLE:	
LAST MODIFIED BY:		
MOTOROLA CONFIDENTIAL RESTRICTED	B PROJECT NAME	REV
THE DRAWING ON THIS PRINT AND INFORMATION THEREWITH ARE PROPRIETARY TO MOTOROLA AND SHALL NOT BE USED OR DISCUSSED IN WHOLE OR IN PART WITHOUT MOTOROLA'S CONSENT.	CAD FILE NAME:	

© COPYRIGHT, MOTOROLA. THIS DOES NOT IMPLY PUBLICATION

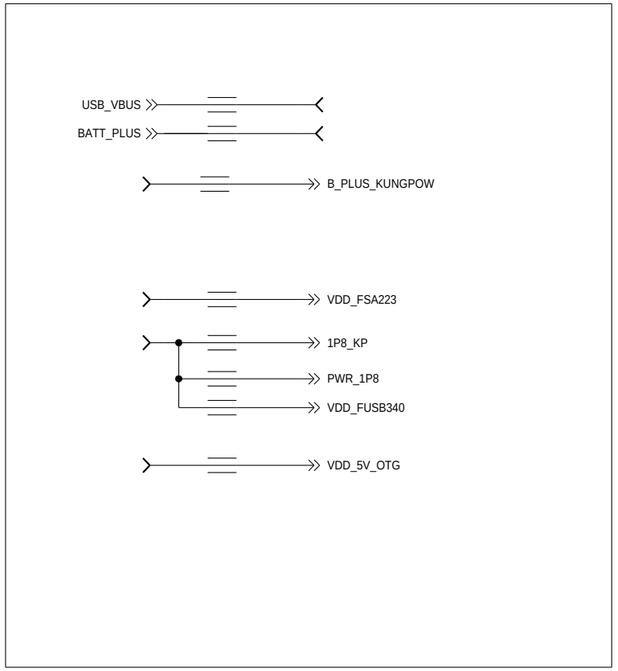

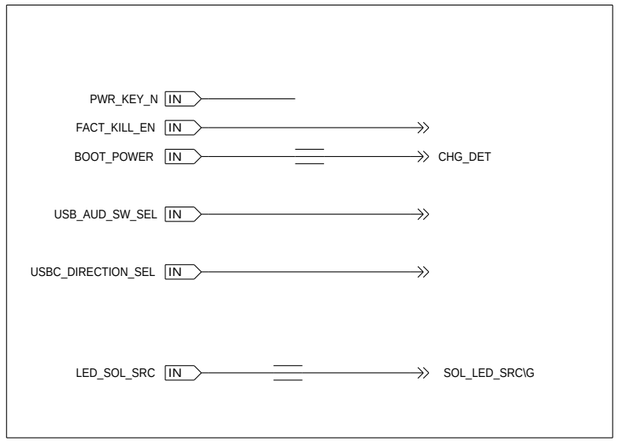

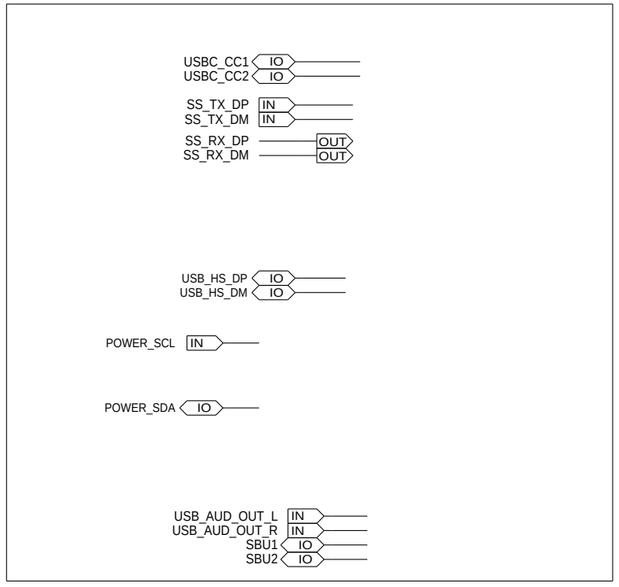

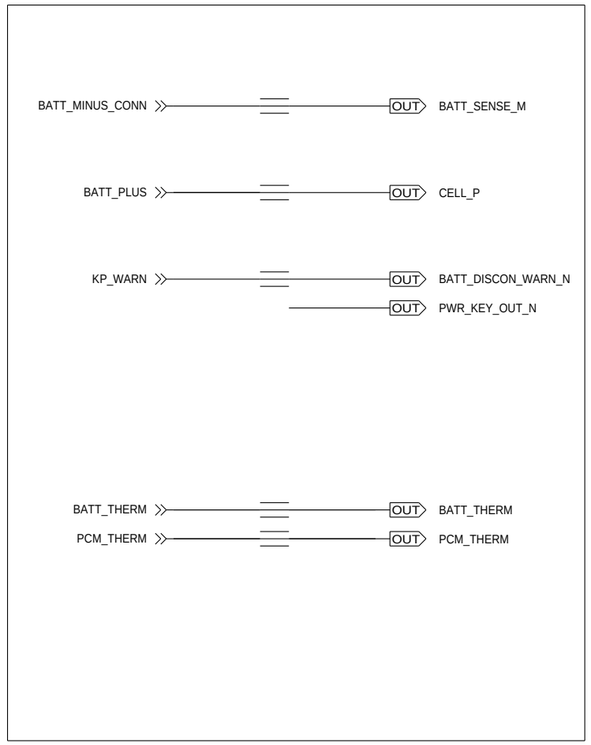

APPROVALS	MOTOROLA MOBILE DEVICES	
ENGINEER:	BLOCK TITLE:	
LAST MODIFIED BY:		
MOTOROLA CONFIDENTIAL RESTRICTED THE DRAWING ON THIS PRINT AND INFORMATION THEREWITH ARE PROPRIETARY TO MOTOROLA AND SHALL NOT BE USED OR DISCUSSED IN WHOLE OR IN PART WITHOUT MOTOROLA'S CONSENT. © COPYRIGHT, MOTOROLA. THIS DOES NOT IMPLY PUBLICATION	B PROJECT NAME	REV
	CAD FILE NAME:	

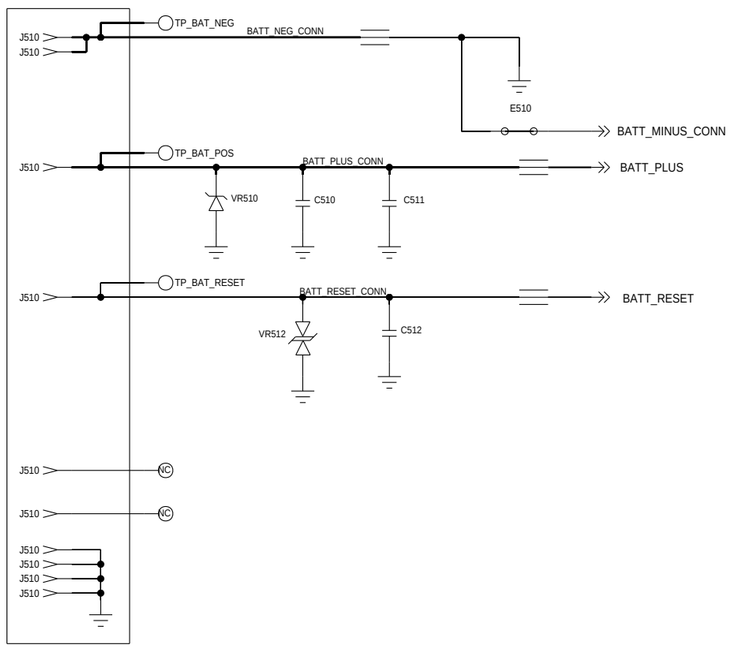

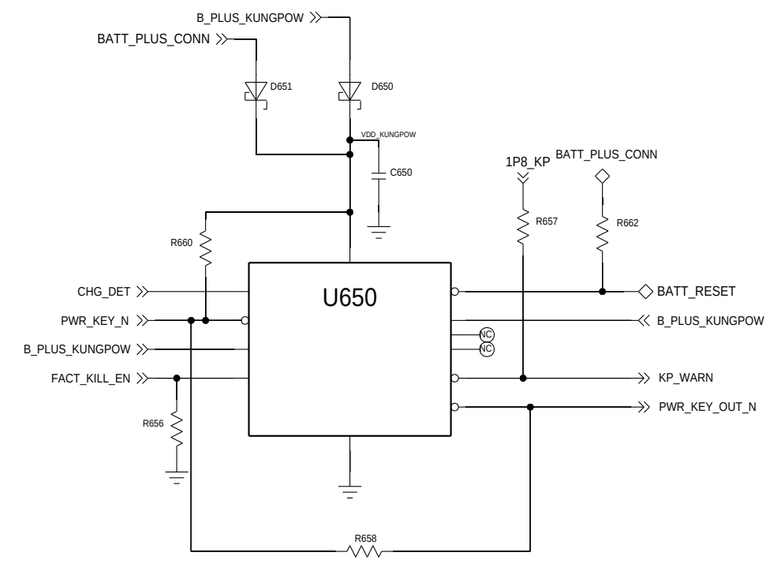

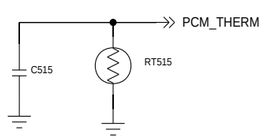

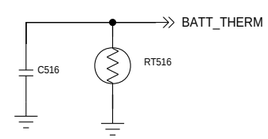

APPROVALS	MOTOROLA MOBILE DEVICES
ENGINEER:	BLOCK TITLE:
LAST MODIFIED BY:	
MOTOROLA CONFIDENTIAL RESTRICTED	B PROJECT NAME — REV
THE DRAWING ON THIS PRINT AND INFORMATION THEREWITH ARE PROPRIETARY TO MOTOROLA AND SHALL NOT BE USED OR DISCUSSED IN WHOLE OR IN PART WITHOUT MOTOROLA'S CONSENT.	CAD FILE NAME:

© COPYRIGHT, MOTOROLA. THIS DOES NOT IMPLY PUBLICATION

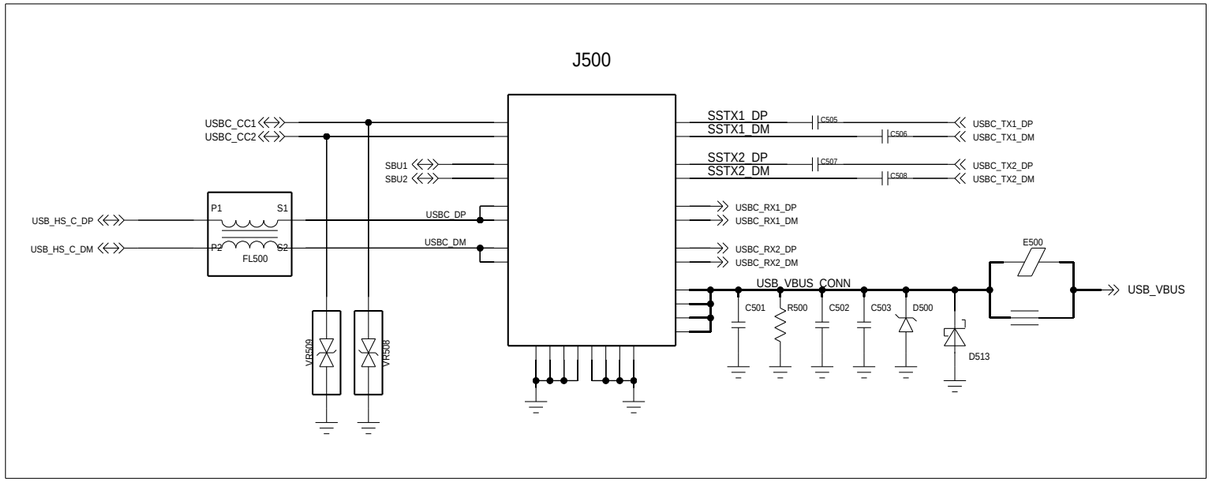

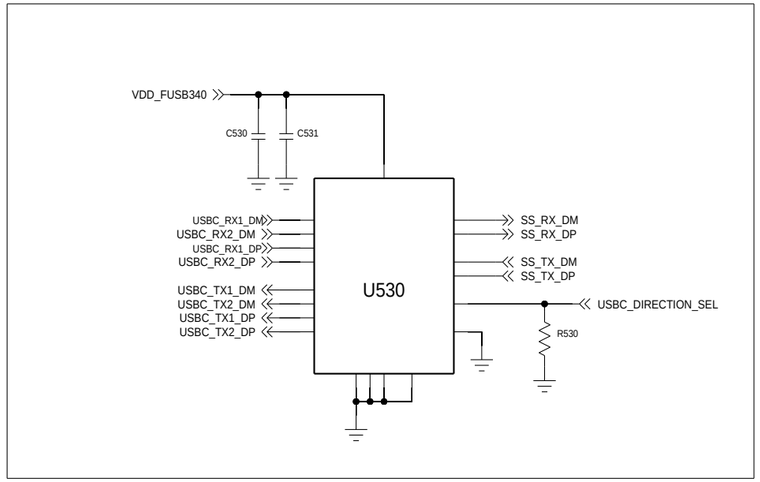

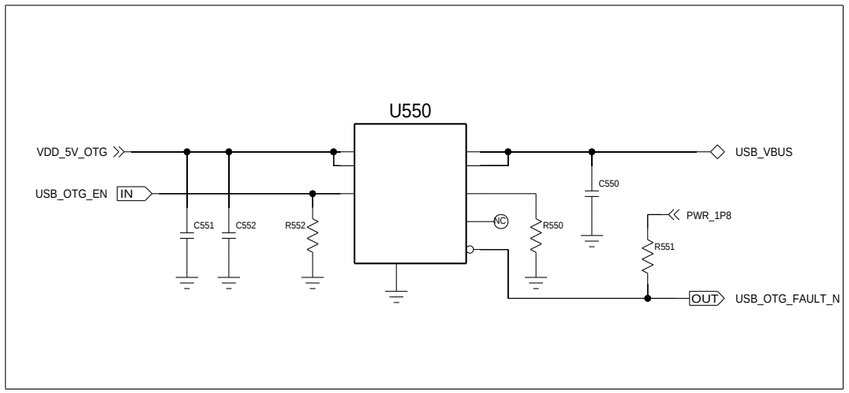

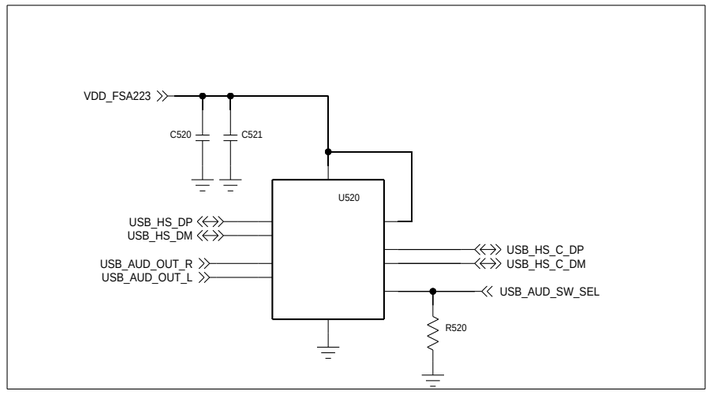

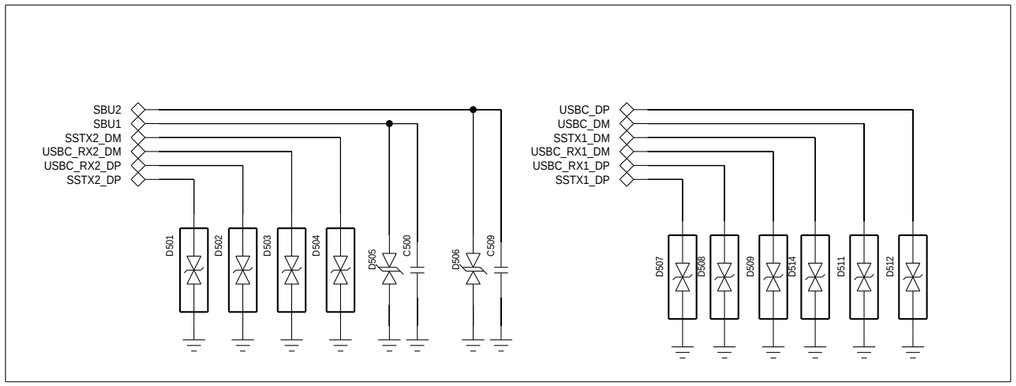

APPROVALS	MOTOROLA MOBILE DEVICES	
ENGINEER:	BLOCK TITLE:	
LAST MODIFIED BY:		
MOTOROLA CONFIDENTIAL RESTRICTED	B	PROJECT NAME / REV
THE DRAWING ON THIS PRINT AND INFORMATION THEREWITH ARE PROPRIETARY TO MOTOROLA AND SHALL NOT BE USED OR DISCUSSED IN WHOLE OR IN PART WITHOUT MOTOROLA'S CONSENT.	CAD FILE NAME:	

© COPYRIGHT, MOTOROLA. THIS DOES NOT IMPLY PUBLICATION

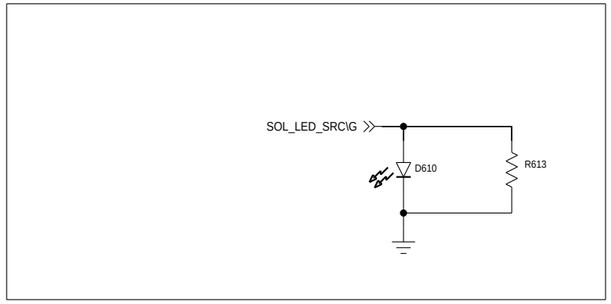

APPROVALS	MOTOROLA MOBILE DEVICES
ENGINEER:	BLOCK TITLE:
LAST MODIFIED BY:	
MOTOROLA CONFIDENTIAL RESTRICTED	B PROJECT NAME / REV
	CAD FILE NAME:

THE DRAWING ON THIS PRINT AND INFORMATION THEREWITH ARE PROPRIETARY TO MOTOROLA AND SHALL NOT BE USED OR DISCUSSED IN WHOLE OR IN PART WITHOUT MOTOROLA'S CONSENT.
© COPYRIGHT, MOTOROLA. THIS DOES NOT IMPLY PUBLICATION

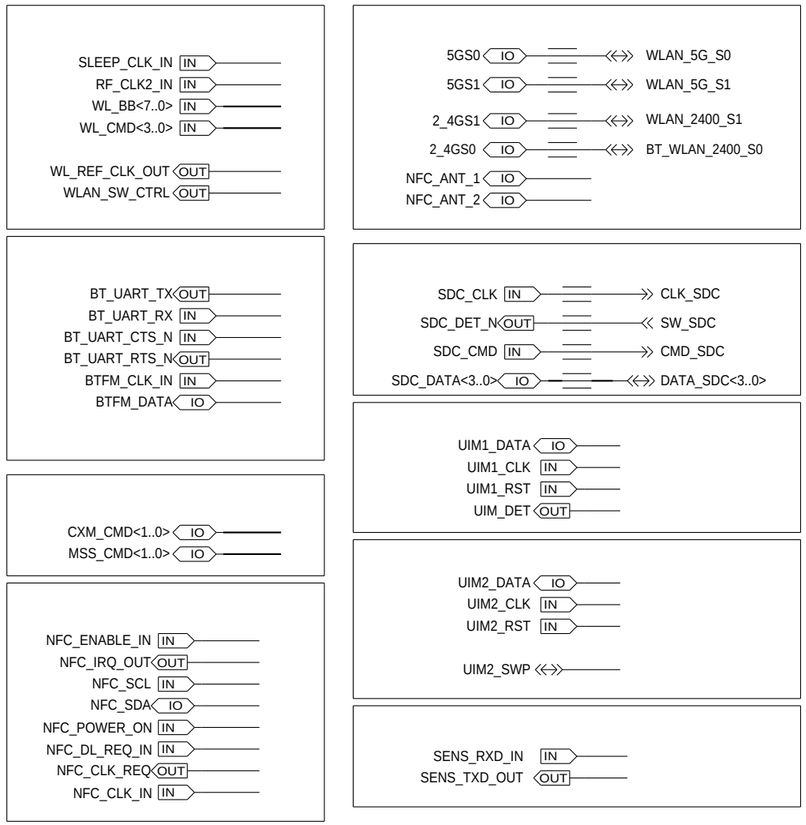

APPROVALS	MOTOROLA MOBILE DEVICES	
ENGINEER:	BLOCK TITLE:	
LAST MODIFIED BY:		
MOTOROLA CONFIDENTIAL RESTRICTED	B PROJECT NAME	REV
THE DRAWING ON THIS PRINT AND INFORMATION THEREWITH ARE PROPRIETARY TO MOTOROLA AND SHALL NOT BE USED OR DISCUSSED IN WHOLE OR IN PART WITHOUT MOTOROLA'S CONSENT.	CAD FILE NAME:	

© COPYRIGHT, MOTOROLA. THIS DOES NOT IMPLY PUBLICATION

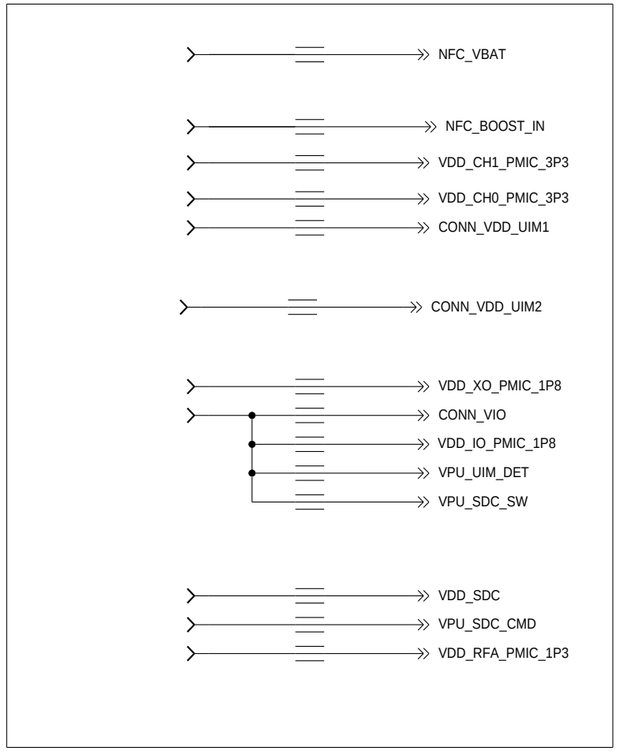

APPROVALS	MOTOROLA MOBILE DEVICES	
ENGINEER:	BLOCK TITLE:	
LAST MODIFIED BY:		
MOTOROLA CONFIDENTIAL RESTRICTED	B	PROJECT NAME / REV
	CAD FILE NAME:	

THE DRAWING ON THIS PRINT AND INFORMATION THEREWITH ARE PROPRIETARY TO MOTOROLA AND SHALL NOT BE USED OR DISCUSSED IN WHOLE OR IN PART WITHOUT MOTOROLA'S CONSENT.
© COPYRIGHT, MOTOROLA. THIS DOES NOT IMPLY PUBLICATION

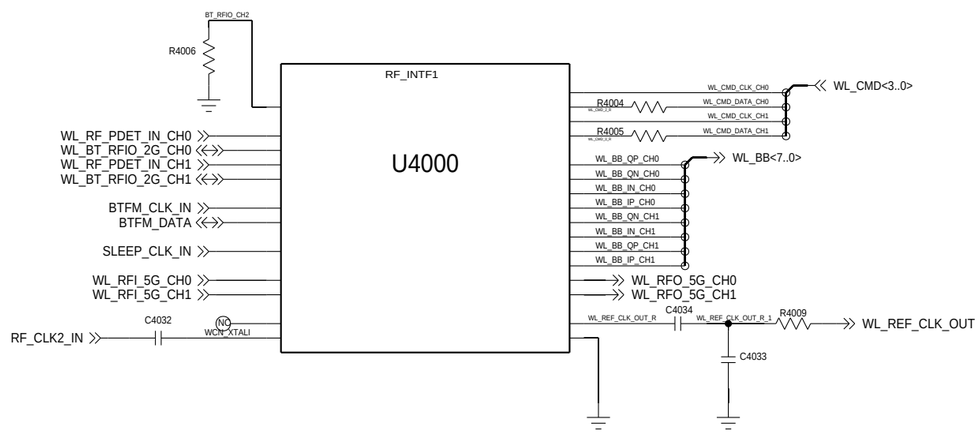

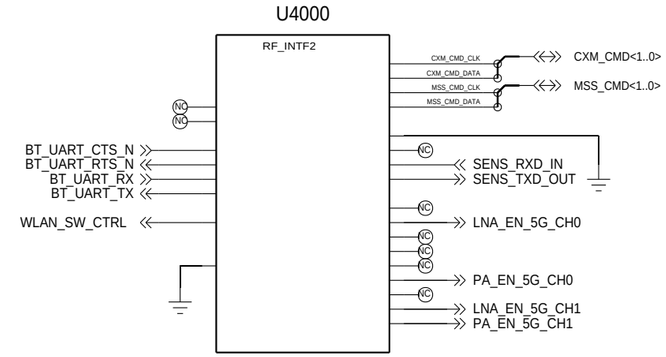

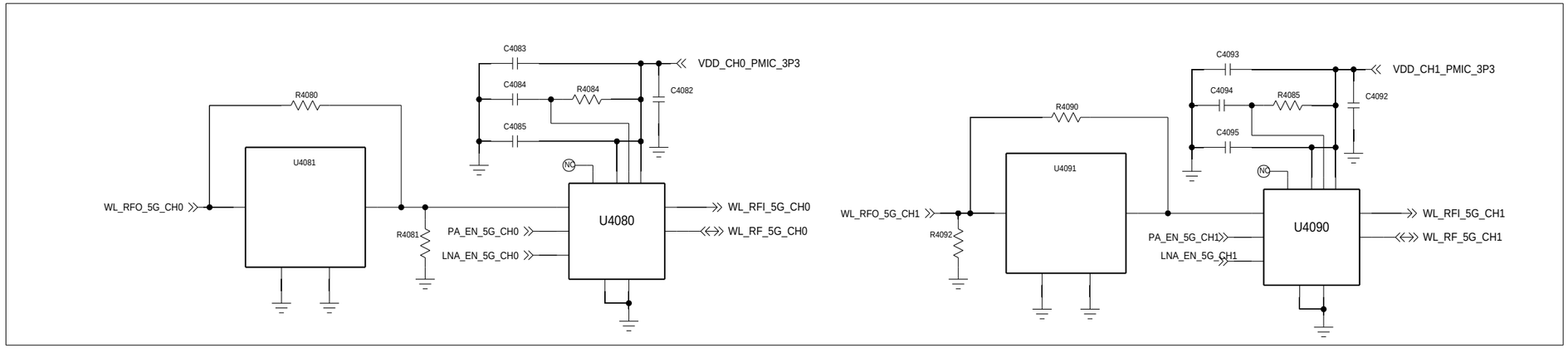

APPROVALS	MOTOROLA MOBILE DEVICES	
ENGINEER:	BLOCK TITLE:	
LAST MODIFIED BY:		
MOTOROLA CONFIDENTIAL RESTRICTED THE DRAWING ON THIS PRINT AND INFORMATION THEREWITH ARE PROPRIETARY TO MOTOROLA AND SHALL NOT BE USED OR DISCUSSED IN WHOLE OR IN PART WITHOUT MOTOROLA'S CONSENT. © COPYRIGHT, MOTOROLA. THIS DOES NOT IMPLY PUBLICATION	B PROJECT NAME	REV
	CAD FILE NAME:	

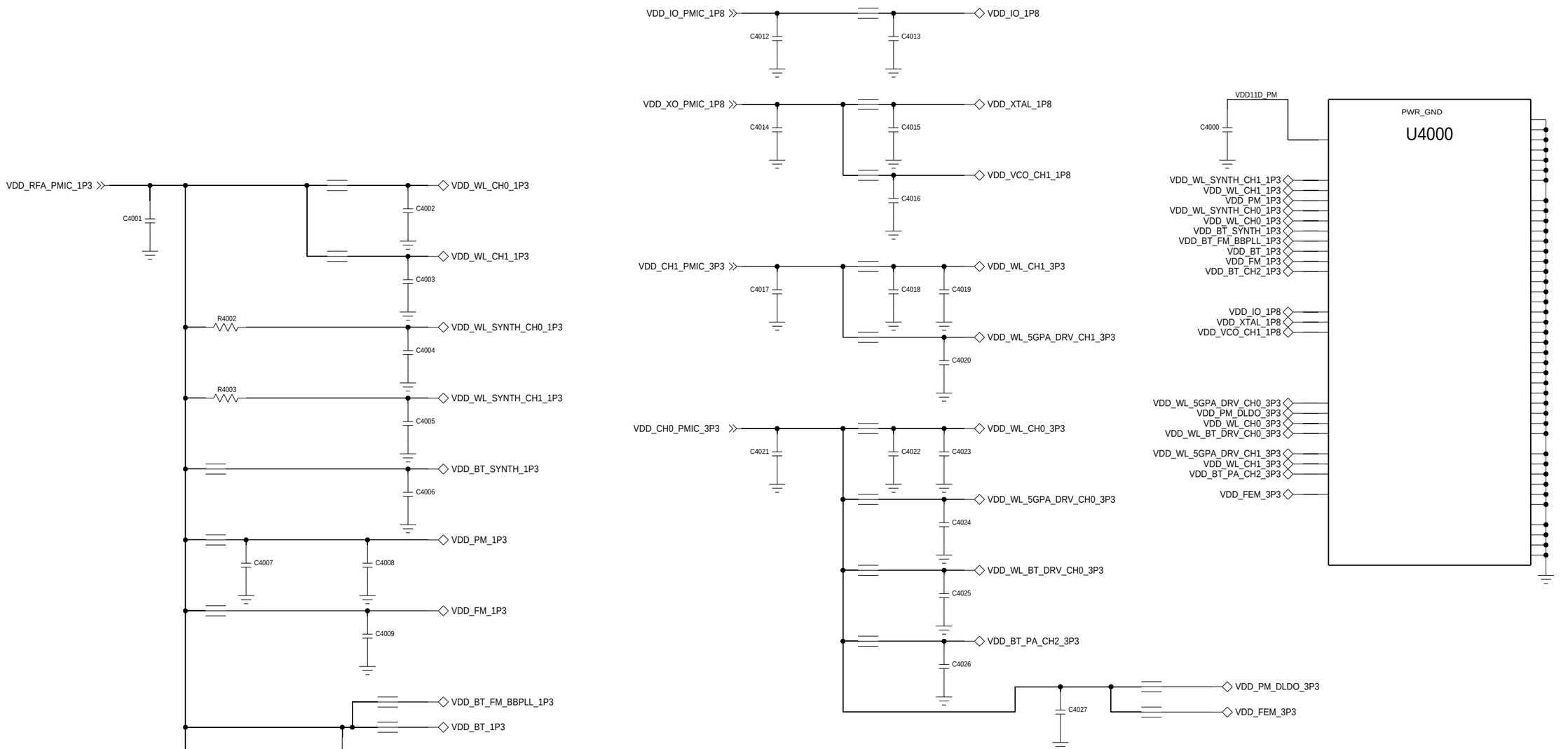

APPROVALS	MOTOROLA MOBILE DEVICES
ENGINEER:	BLOCK TITLE:
LAST MODIFIED BY:	

MOTOROLA CONFIDENTIAL RESTRICTED

THE DRAWING ON THIS PRINT AND INFORMATION THEREWITH ARE PROPRIETARY TO MOTOROLA AND SHALL NOT BE USED OR DISCUSSED IN WHOLE OR IN PART WITHOUT MOTOROLA'S CONSENT.
© COPYRIGHT, MOTOROLA. THIS DOES NOT IMPLY PUBLICATION

B	PROJECT NAME	REV
CAD FILE NAME:		

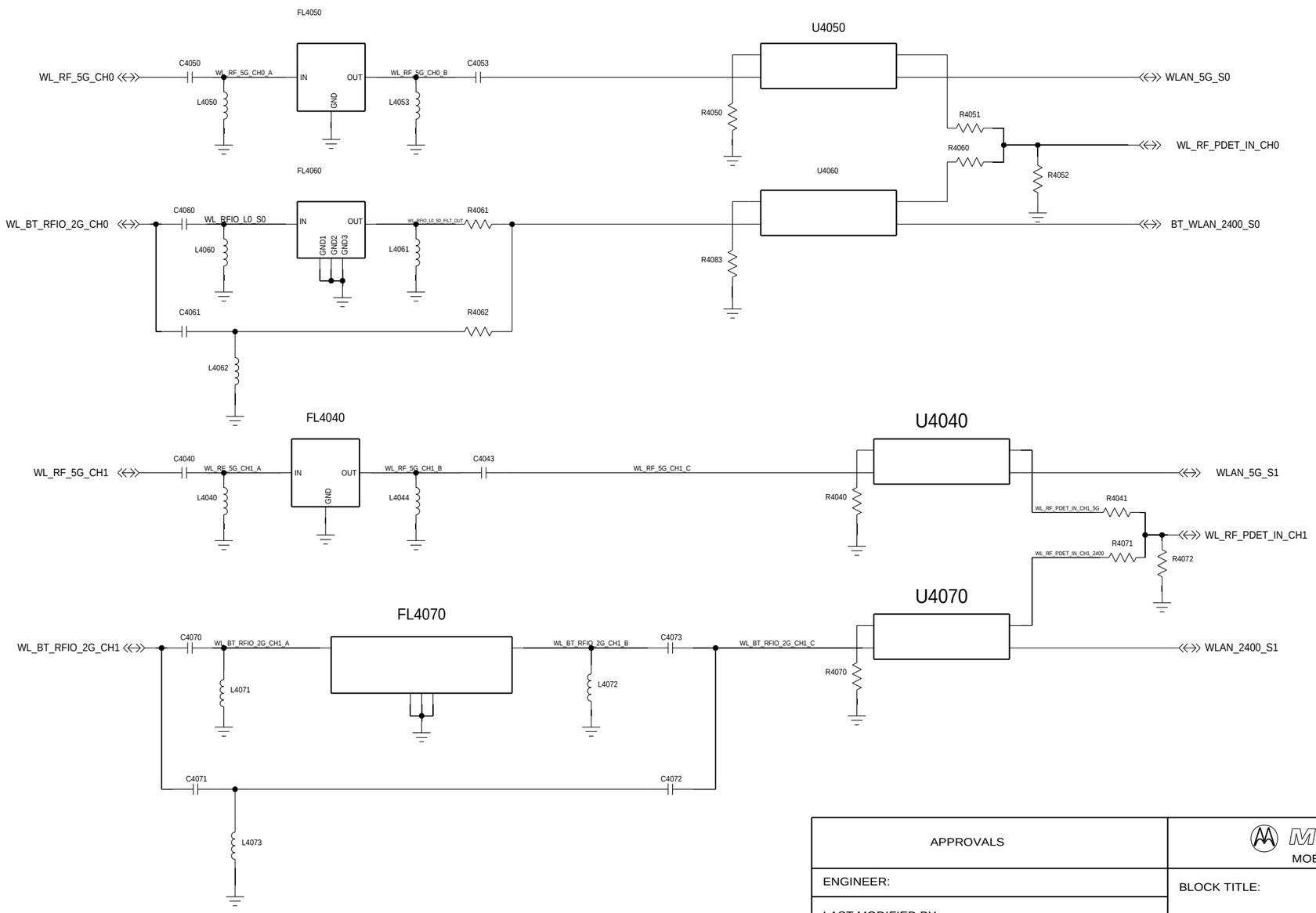

APPROVALS	MOTOROLA MOBILE DEVICES
ENGINEER:	BLOCK TITLE:
LAST MODIFIED BY:	

MOTOROLA CONFIDENTIAL RESTRICTED

THE DRAWING ON THIS PRINT AND INFORMATION THEREWITH ARE PROPRIETARY TO MOTOROLA AND SHALL NOT BE USED OR DISCUSSED IN WHOLE OR IN PART WITHOUT MOTOROLA'S CONSENT.
© COPYRIGHT, MOTOROLA. THIS DOES NOT IMPLY PUBLICATION

B	PROJECT NAME	REV
CAD FILE NAME:		

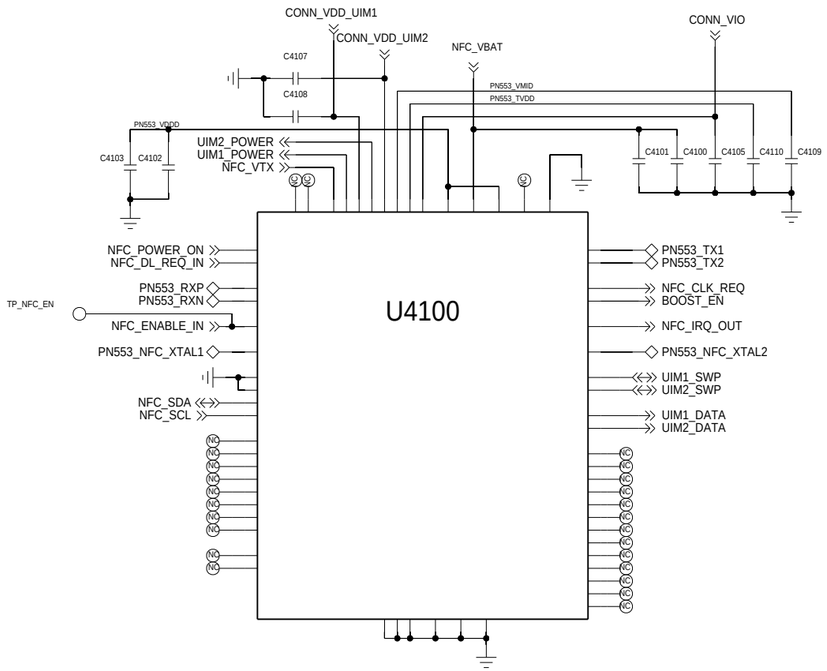

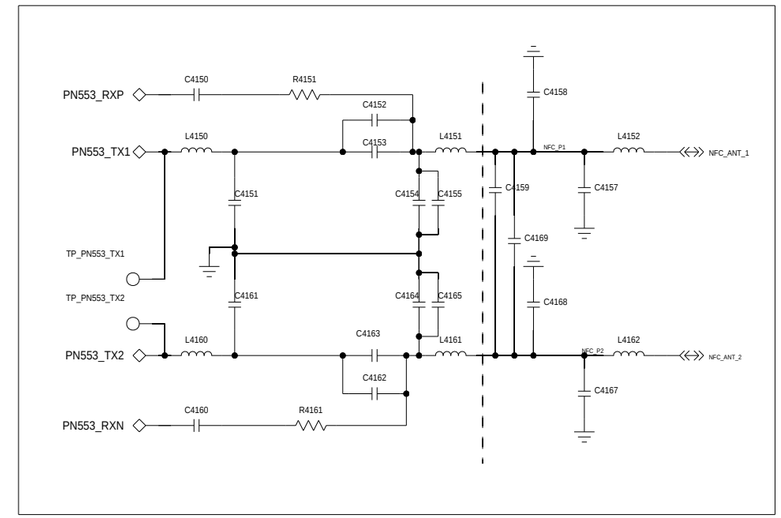

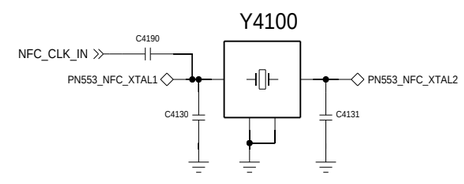

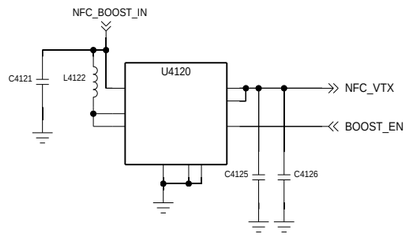

APPROVALS	MOTOROLA MOBILE DEVICES	
ENGINEER:	BLOCK TITLE:	
LAST MODIFIED BY:		
MOTOROLA CONFIDENTIAL RESTRICTED THE DRAWING ON THIS PRINT AND INFORMATION THEREWITH ARE PROPRIETARY TO MOTOROLA AND SHALL NOT BE USED OR DISCUSSED IN WHOLE OR IN PART WITHOUT MOTOROLA'S CONSENT. © COPYRIGHT, MOTOROLA. THIS DOES NOT IMPLY PUBLICATION	B PROJECT NAME	REV
	CAD FILE NAME:	

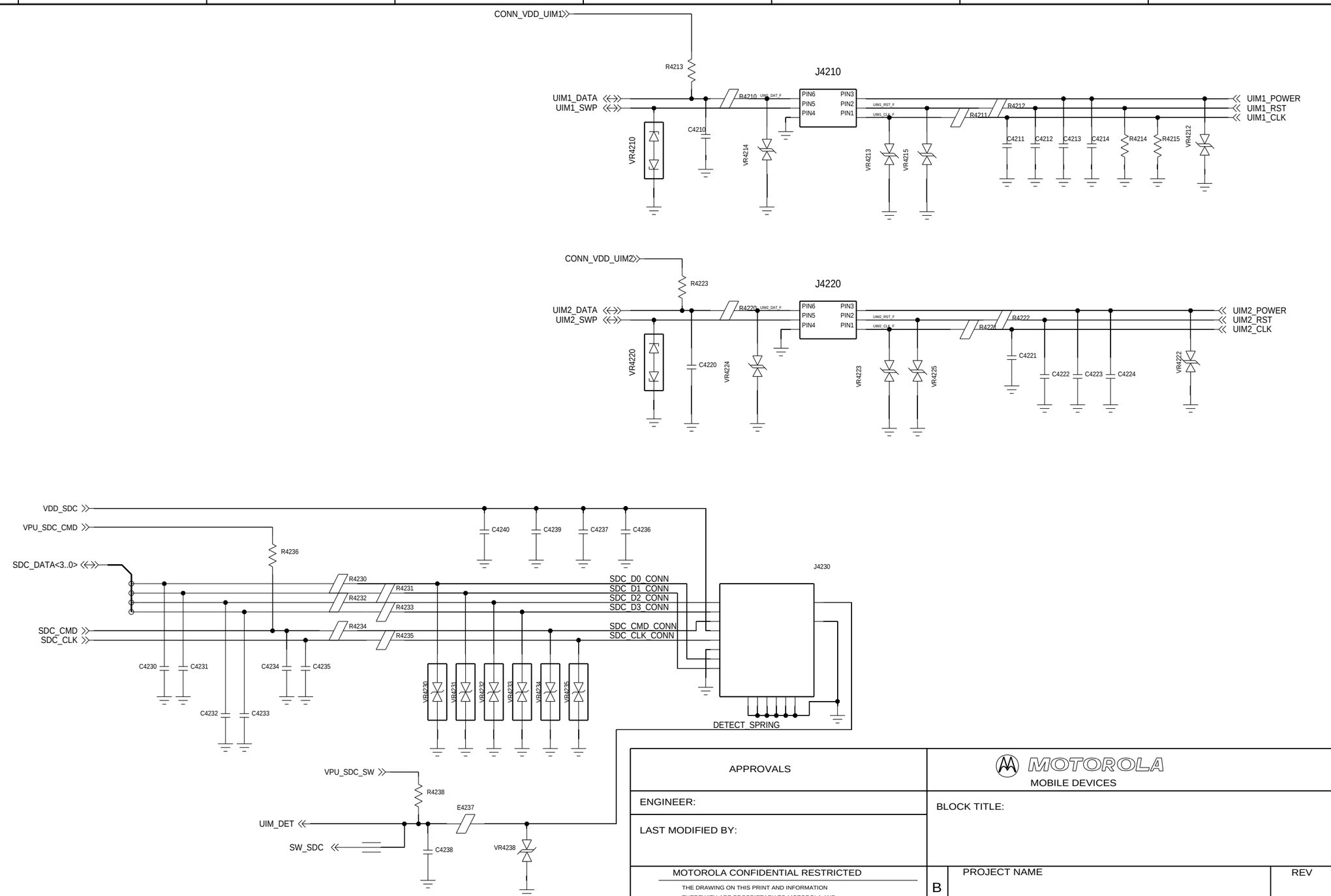

APPROVALS	MOTOROLA MOBILE DEVICES
ENGINEER:	BLOCK TITLE:
LAST MODIFIED BY:	
MOTOROLA CONFIDENTIAL RESTRICTED	B — PROJECT NAME — REV
THE DRAWING ON THIS PRINT AND INFORMATION THEREWITH ARE PROPRIETARY TO MOTOROLA AND SHALL NOT BE USED OR DISCUSSED IN WHOLE OR IN PART WITHOUT MOTOROLA'S CONSENT.	CAD FILE NAME:

© COPYRIGHT, MOTOROLA. THIS DOES NOT IMPLY PUBLICATION

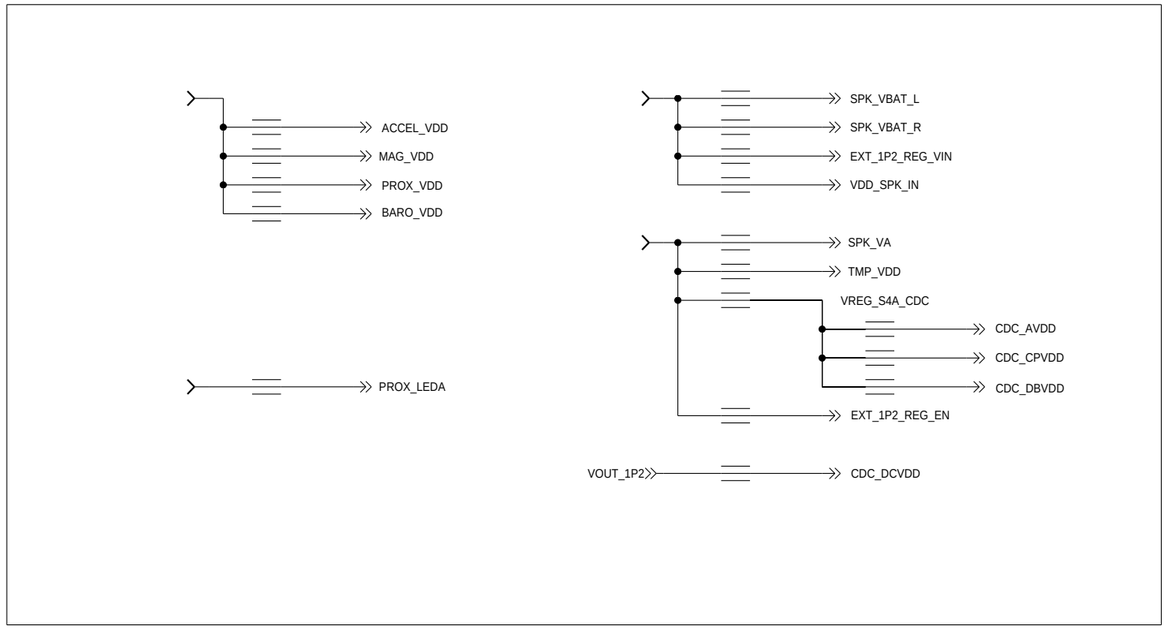

APPROVALS	MOTOROLA MOBILE DEVICES
ENGINEER:	BLOCK TITLE:
LAST MODIFIED BY:	
MOTOROLA CONFIDENTIAL RESTRICTED	B PROJECT NAME / REV
THE DRAWING ON THIS PRINT AND INFORMATION THEREWITH ARE PROPRIETARY TO MOTOROLA AND SHALL NOT BE USED OR DISCUSSED IN WHOLE OR IN PART WITHOUT MOTOROLA'S CONSENT.	CAD FILE NAME:

© COPYRIGHT, MOTOROLA. THIS DOES NOT IMPLY PUBLICATION

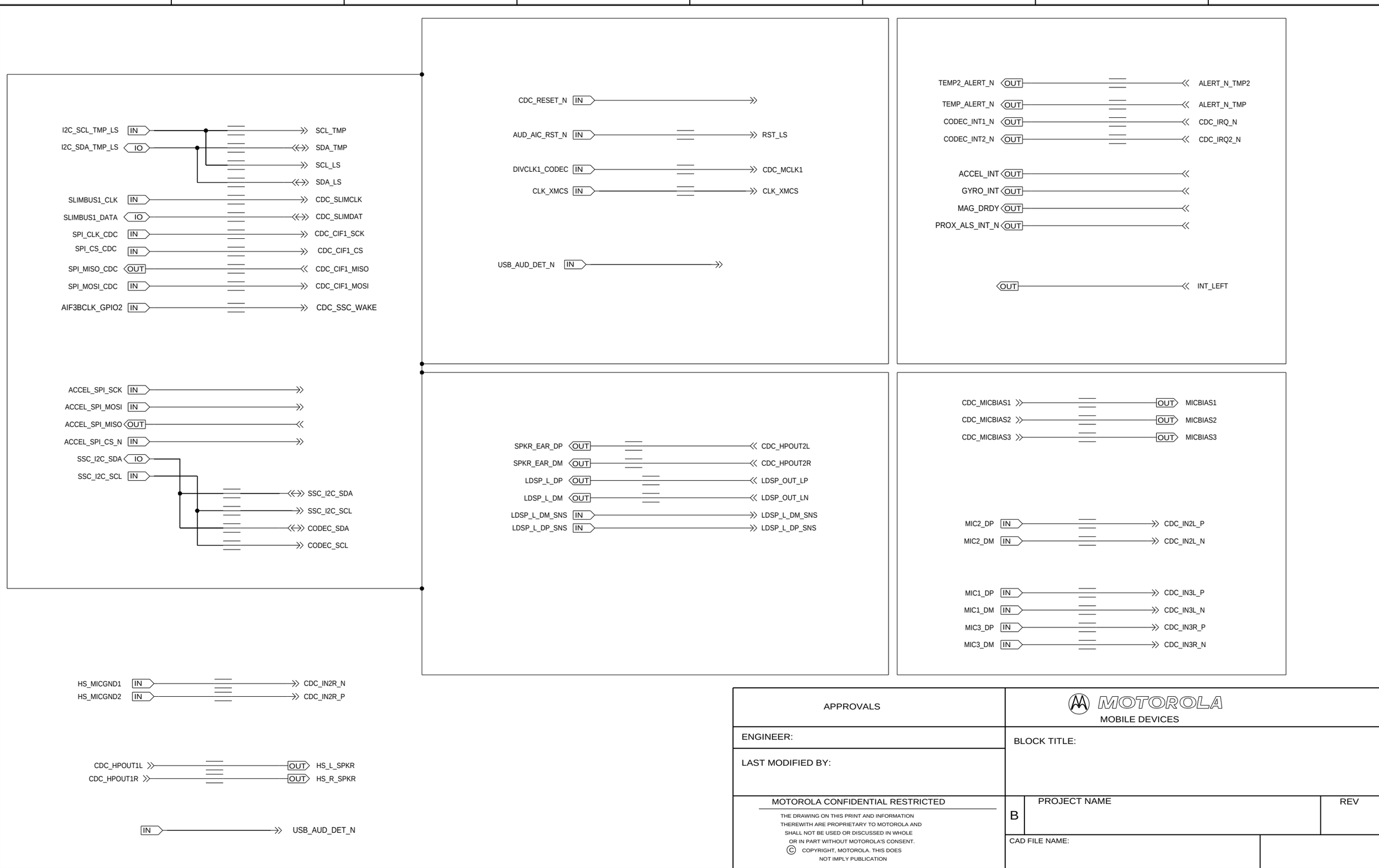

APPROVALS	MOTOROLA MOBILE DEVICES	
ENGINEER:	BLOCK TITLE:	
LAST MODIFIED BY:		
MOTOROLA CONFIDENTIAL RESTRICTED	B PROJECT NAME	REV
THE DRAWING ON THIS PRINT AND INFORMATION THEREWITH ARE PROPRIETARY TO MOTOROLA AND SHALL NOT BE USED OR DISCUSSED IN WHOLE OR IN PART WITHOUT MOTOROLA'S CONSENT.	CAD FILE NAME:	

© COPYRIGHT, MOTOROLA. THIS DOES NOT IMPLY PUBLICATION

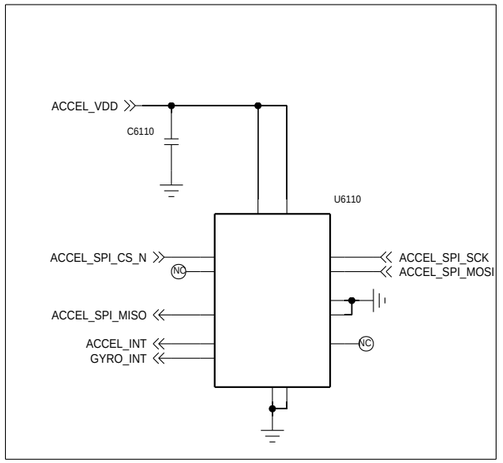

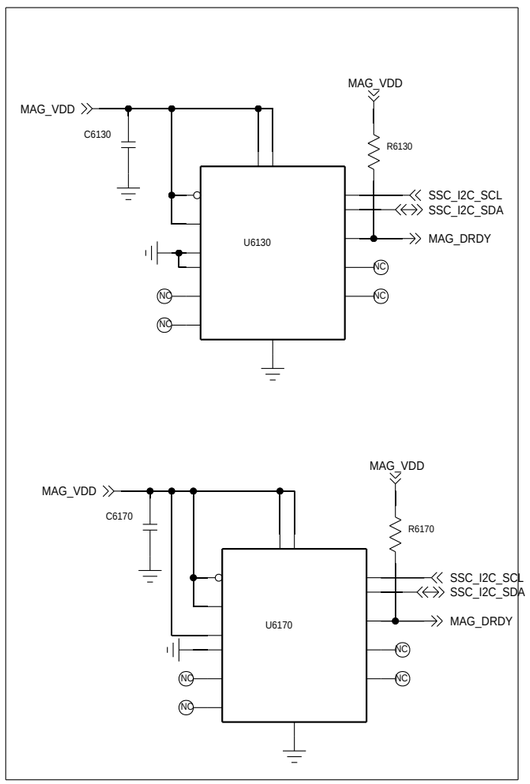

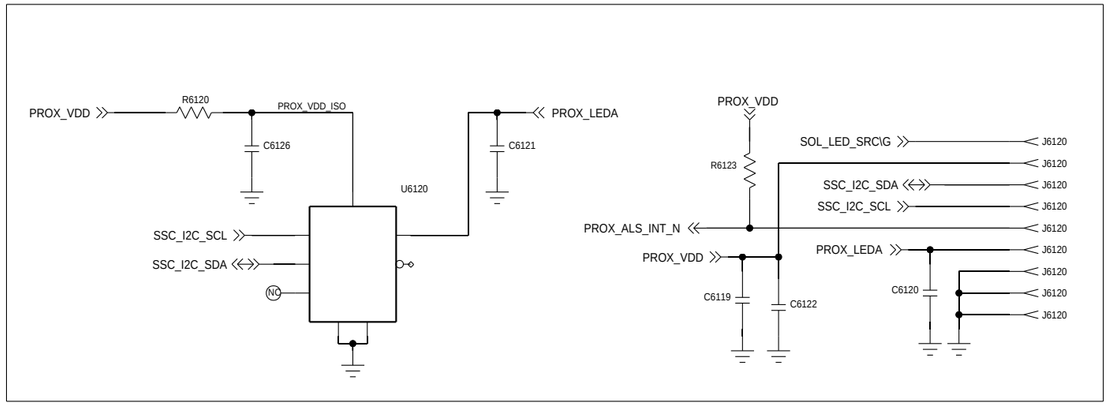

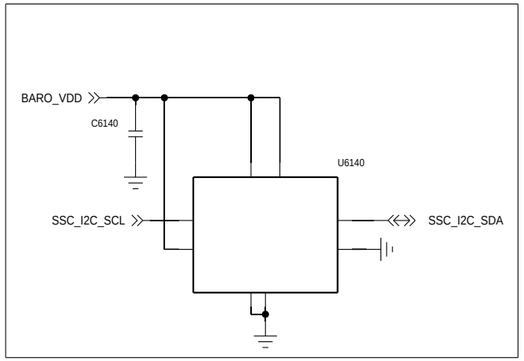

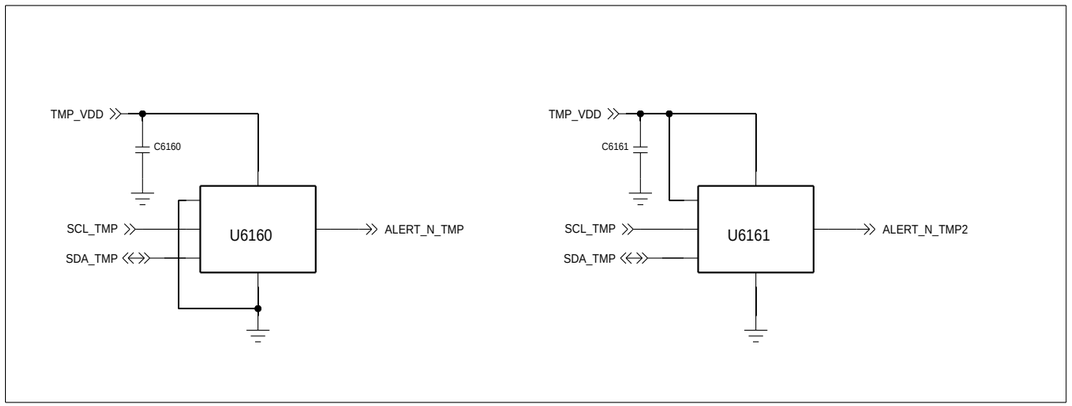

APPROVALS	MOTOROLA MOBILE DEVICES	
ENGINEER:	BLOCK TITLE:	
LAST MODIFIED BY:		
MOTOROLA CONFIDENTIAL RESTRICTED	B PROJECT NAME	REV
	CAD FILE NAME:	

THE DRAWING ON THIS PRINT AND INFORMATION THEREWITH ARE PROPRIETARY TO MOTOROLA AND SHALL NOT BE USED OR DISCUSSED IN WHOLE OR IN PART WITHOUT MOTOROLA'S CONSENT.
© COPYRIGHT, MOTOROLA. THIS DOES NOT IMPLY PUBLICATION

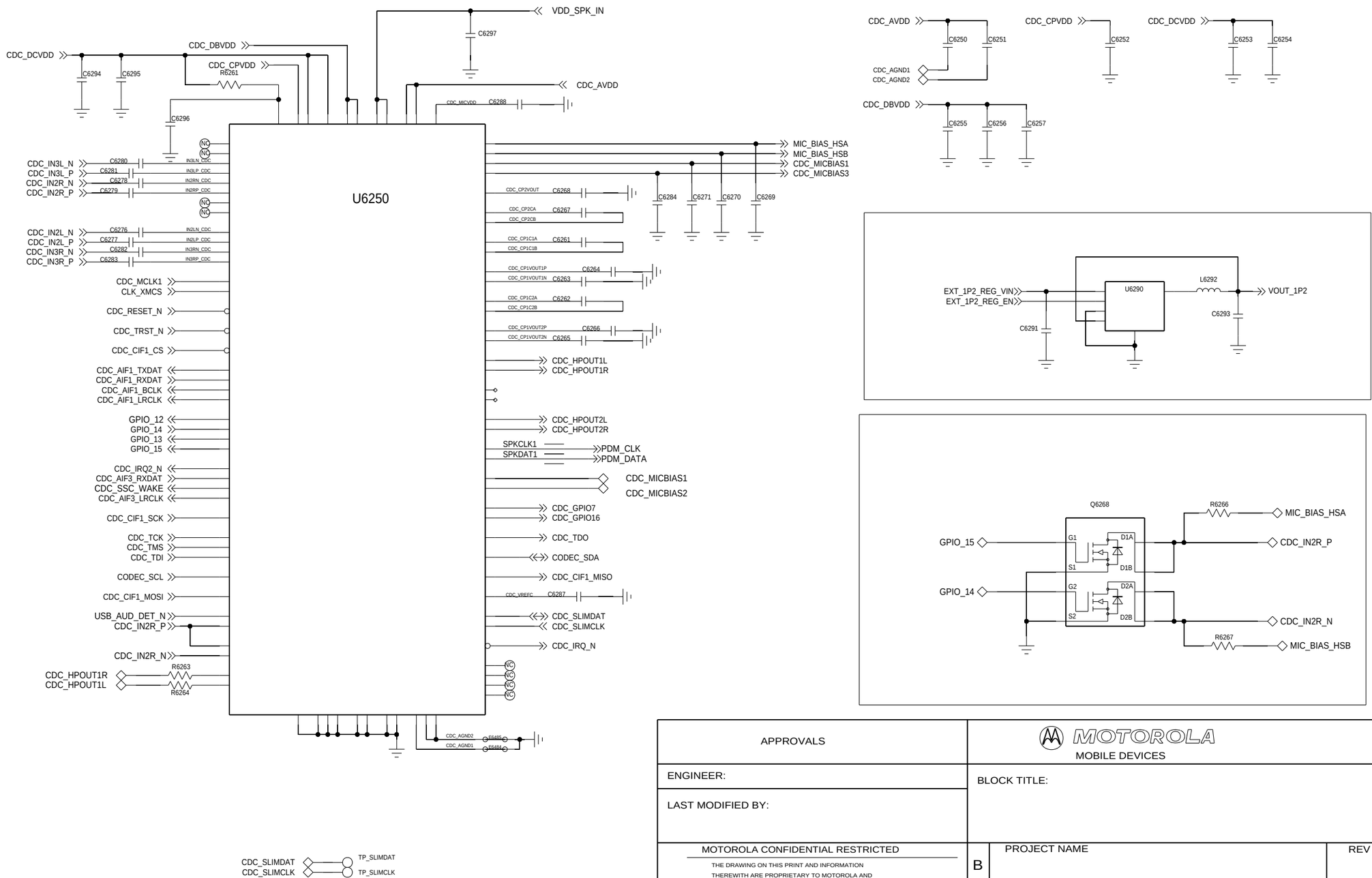

APPROVALS	MOTOROLA MOBILE DEVICES
ENGINEER:	BLOCK TITLE:
LAST MODIFIED BY:	

MOTOROLA CONFIDENTIAL RESTRICTED

THE DRAWING ON THIS PRINT AND INFORMATION THEREWITH ARE PROPRIETARY TO MOTOROLA AND SHALL NOT BE USED OR DISCUSSED IN WHOLE OR IN PART WITHOUT MOTOROLA'S CONSENT.

© COPYRIGHT, MOTOROLA. THIS DOES NOT IMPLY PUBLICATION

B	PROJECT NAME	REV
CAD FILE NAME:		

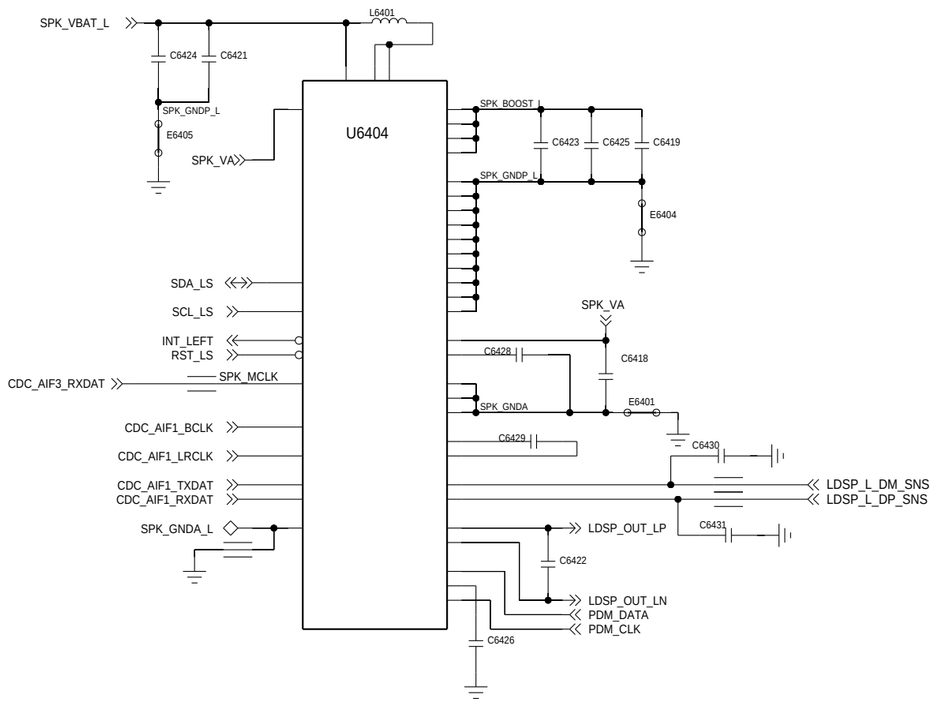

APPROVALS	MOTOROLA MOBILE DEVICES
ENGINEER:	BLOCK TITLE:
LAST MODIFIED BY:	
MOTOROLA CONFIDENTIAL RESTRICTED	B — PROJECT NAME — REV
THE DRAWING ON THIS PRINT AND INFORMATION THEREWITH ARE PROPRIETARY TO MOTOROLA AND SHALL NOT BE USED OR DISCUSSED IN WHOLE OR IN PART WITHOUT MOTOROLA'S CONSENT.	CAD FILE NAME:

© COPYRIGHT, MOTOROLA. THIS DOES NOT IMPLY PUBLICATION

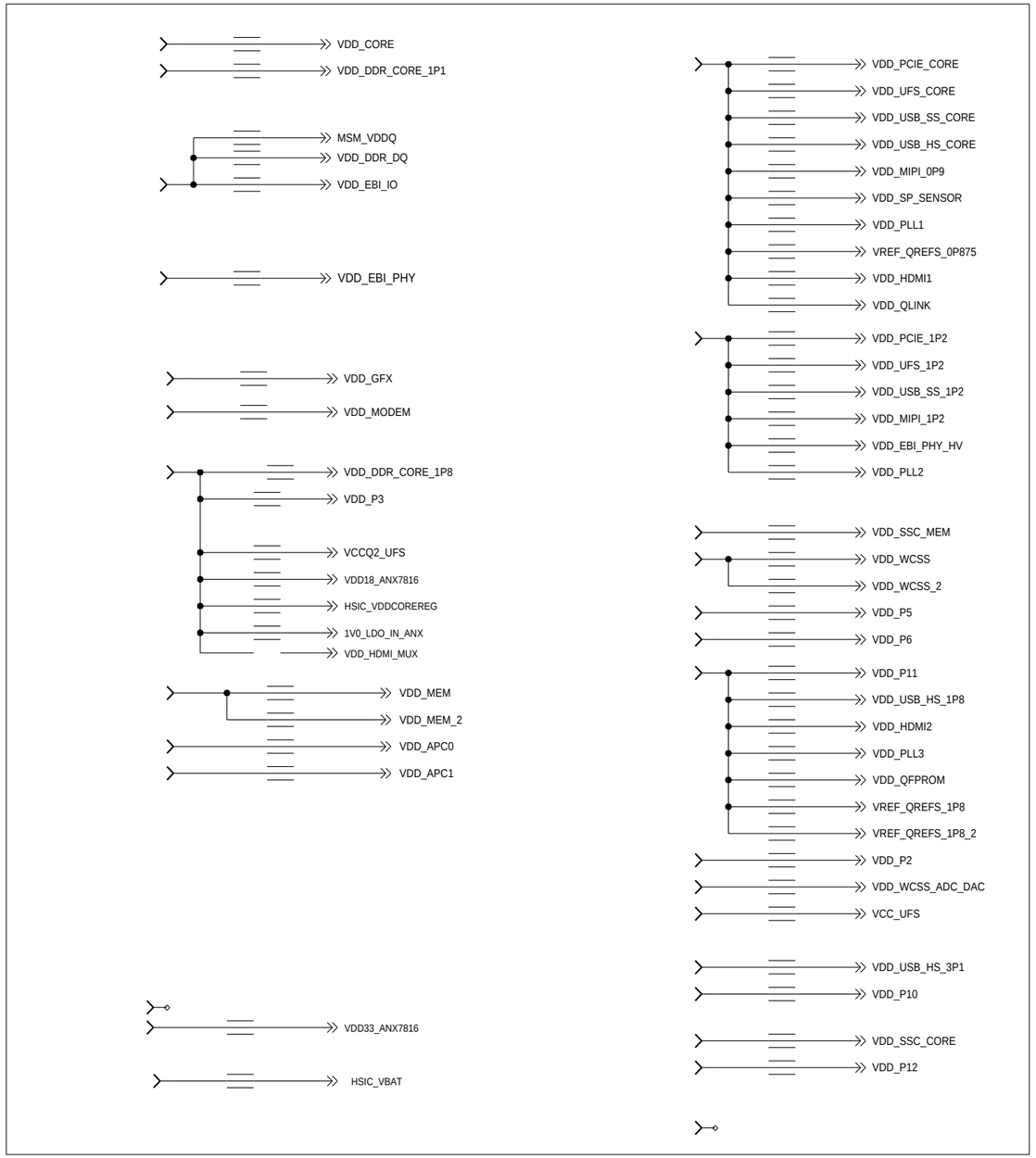

APPROVALS	MOTOROLA MOBILE DEVICES
ENGINEER:	BLOCK TITLE:
LAST MODIFIED BY:	

MOTOROLA CONFIDENTIAL RESTRICTED

THE DRAWING ON THIS PRINT AND INFORMATION THEREWITH ARE PROPRIETARY TO MOTOROLA AND SHALL NOT BE USED OR DISCUSSED IN WHOLE OR IN PART WITHOUT MOTOROLA'S CONSENT.
© COPYRIGHT, MOTOROLA. THIS DOES NOT IMPLY PUBLICATION

B	PROJECT NAME	REV
CAD FILE NAME:		

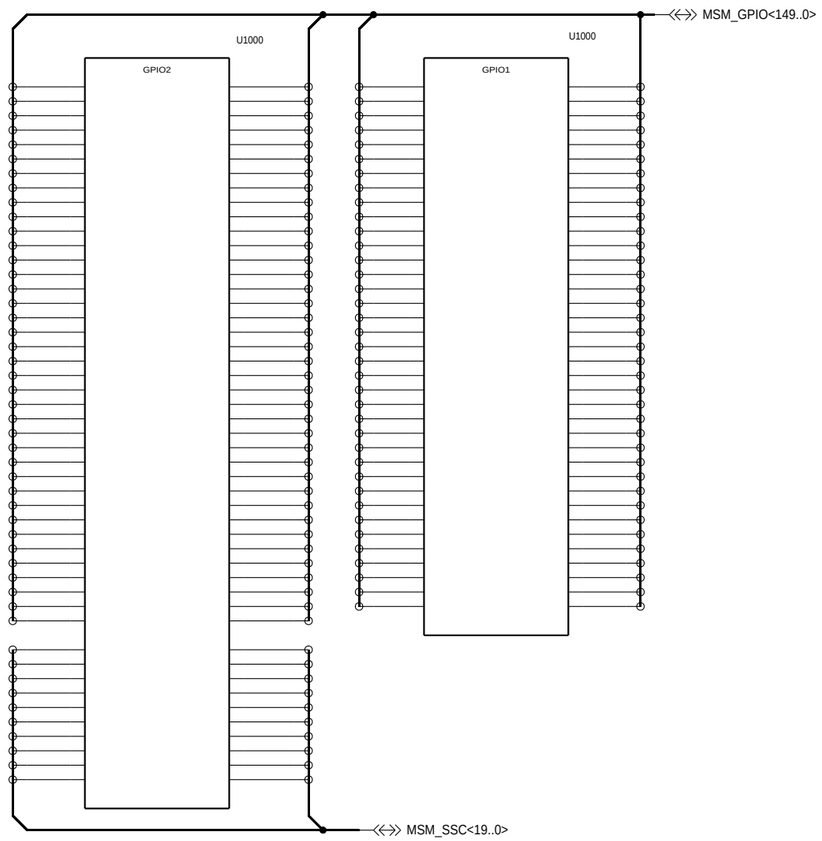

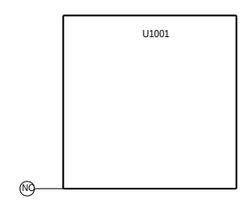

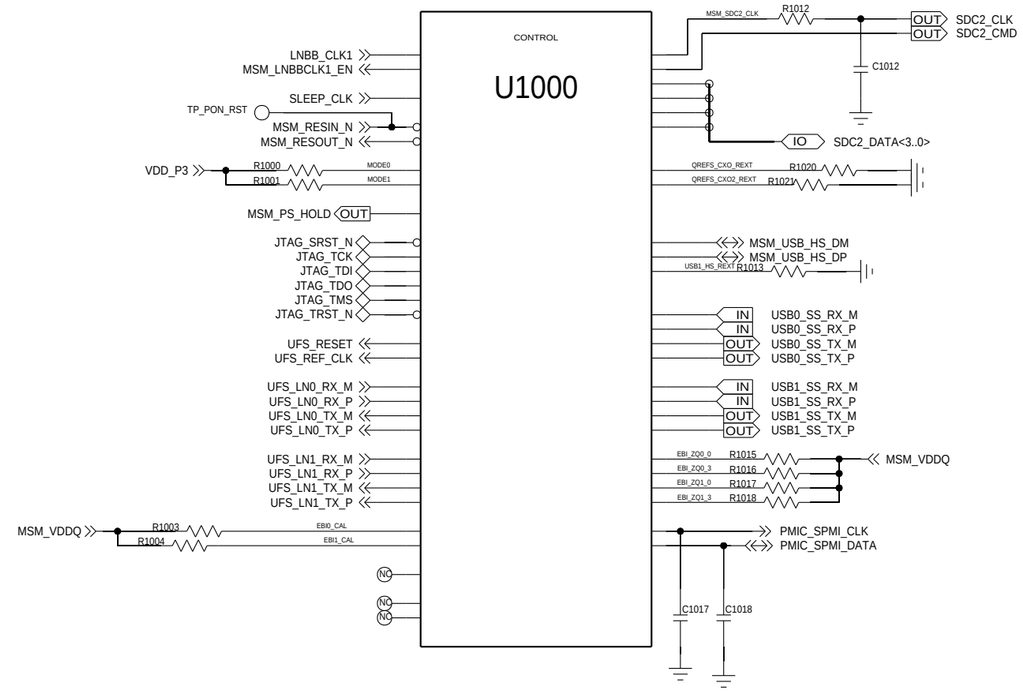

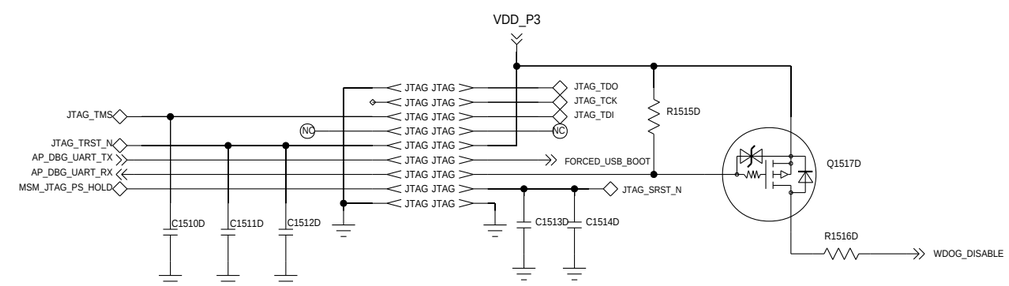

APPROVALS	MOTOROLA MOBILE DEVICES
ENGINEER:	BLOCK TITLE:
LAST MODIFIED BY:	
MOTOROLA CONFIDENTIAL RESTRICTED	B — PROJECT NAME — REV
THE DRAWING ON THIS PRINT AND INFORMATION THEREWITH ARE PROPRIETARY TO MOTOROLA AND SHALL NOT BE USED OR DISCUSSED IN WHOLE OR IN PART WITHOUT MOTOROLA'S CONSENT.	CAD FILE NAME:

© COPYRIGHT, MOTOROLA. THIS DOES NOT IMPLY PUBLICATION

U1000

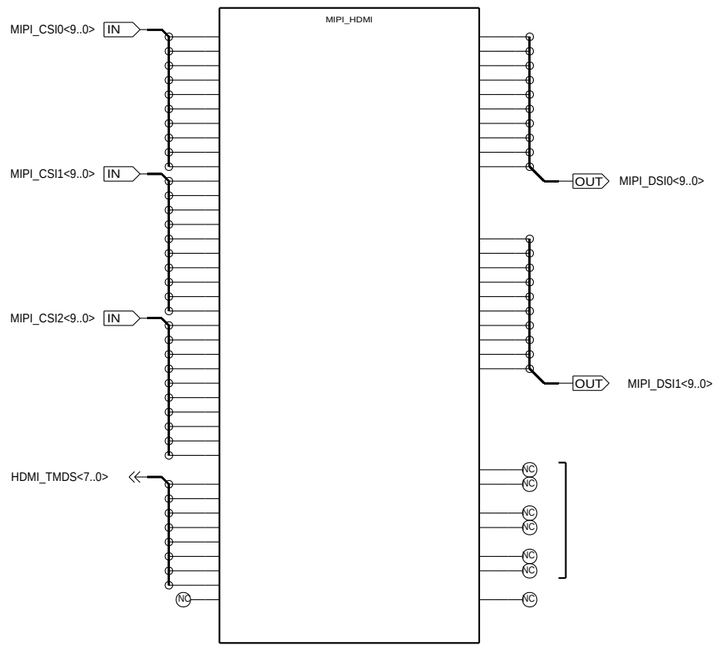

APPROVALS	MOTOROLA MOBILE DEVICES
ENGINEER:	BLOCK TITLE:
LAST MODIFIED BY:	
MOTOROLA CONFIDENTIAL RESTRICTED	B — PROJECT NAME — REV
THE DRAWING ON THIS PRINT AND INFORMATION THEREWITH ARE PROPRIETARY TO MOTOROLA AND SHALL NOT BE USED OR DISCUSSED IN WHOLE OR IN PART WITHOUT MOTOROLA'S CONSENT.	CAD FILE NAME:

© COPYRIGHT, MOTOROLA. THIS DOES NOT IMPLY PUBLICATION

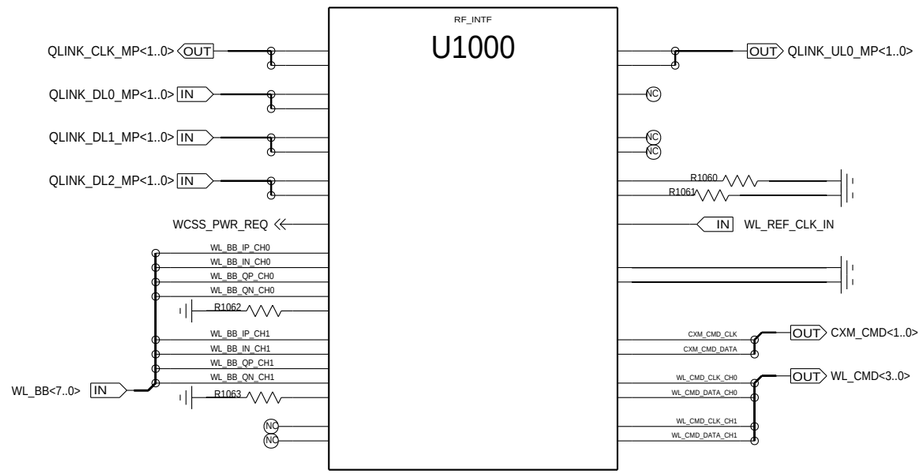

APPROVALS	MOTOROLA MOBILE DEVICES
ENGINEER:	BLOCK TITLE:
LAST MODIFIED BY:	
MOTOROLA CONFIDENTIAL RESTRICTED	B PROJECT NAME / REV
	CAD FILE NAME:

THE DRAWING ON THIS PRINT AND INFORMATION THEREWITH ARE PROPRIETARY TO MOTOROLA AND SHALL NOT BE USED OR DISCUSSED IN WHOLE OR IN PART WITHOUT MOTOROLA'S CONSENT.
© COPYRIGHT, MOTOROLA. THIS DOES NOT IMPLY PUBLICATION

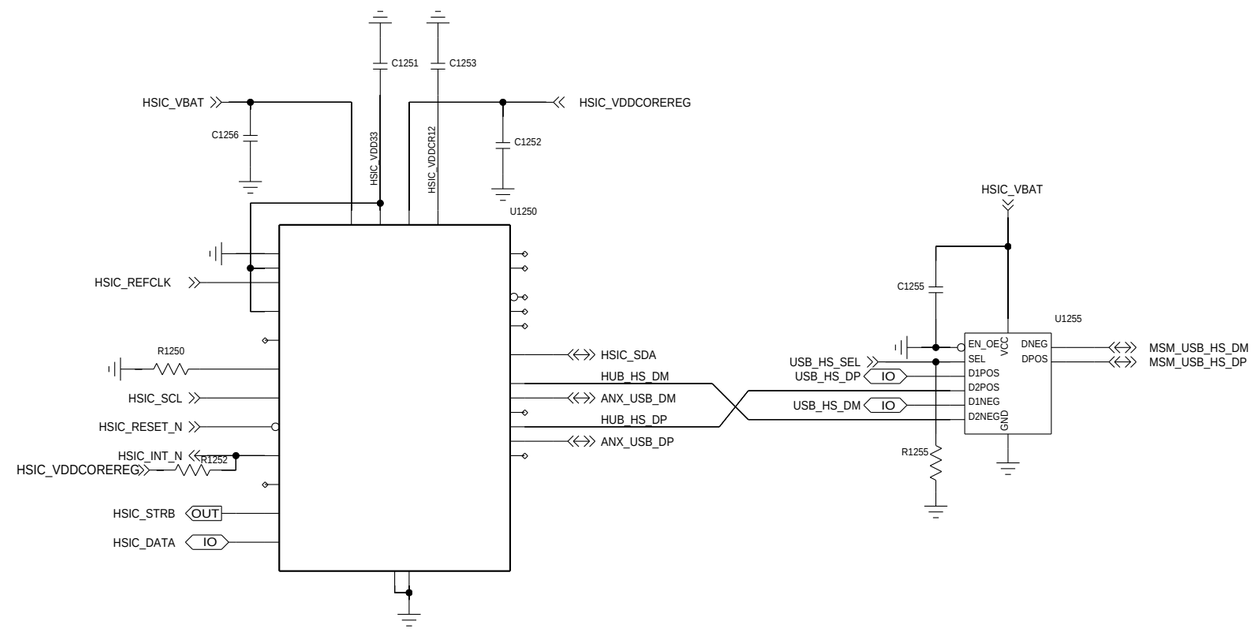

APPROVALS	MOTOROLA MOBILE DEVICES
ENGINEER:	BLOCK TITLE:
LAST MODIFIED BY:	

MOTOROLA CONFIDENTIAL RESTRICTED

THE DRAWING ON THIS PRINT AND INFORMATION THEREWITH ARE PROPRIETARY TO MOTOROLA AND SHALL NOT BE USED OR DISCUSSED IN WHOLE OR IN PART WITHOUT MOTOROLA'S CONSENT.
© COPYRIGHT, MOTOROLA. THIS DOES NOT IMPLY PUBLICATION

B	PROJECT NAME	REV
CAD FILE NAME:		

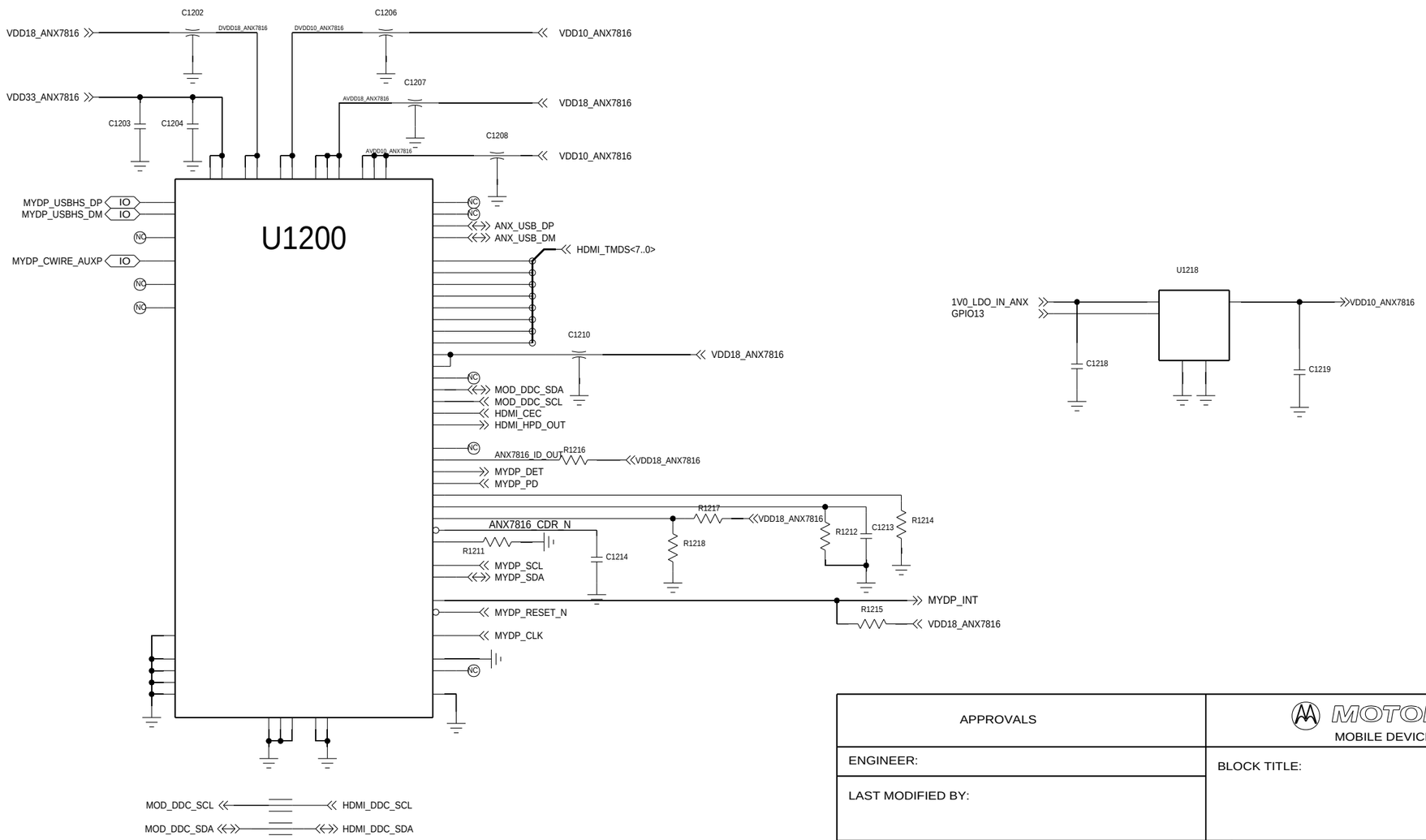

APPROVALS	MOTOROLA MOBILE DEVICES	
ENGINEER:	BLOCK TITLE:	
LAST MODIFIED BY:		
MOTOROLA CONFIDENTIAL RESTRICTED	B	PROJECT NAME / REV
THE DRAWING ON THIS PRINT AND INFORMATION THEREWITH ARE PROPRIETARY TO MOTOROLA AND SHALL NOT BE USED OR DISCUSSED IN WHOLE OR IN PART WITHOUT MOTOROLA'S CONSENT.	CAD FILE NAME:	

© COPYRIGHT, MOTOROLA. THIS DOES NOT IMPLY PUBLICATION

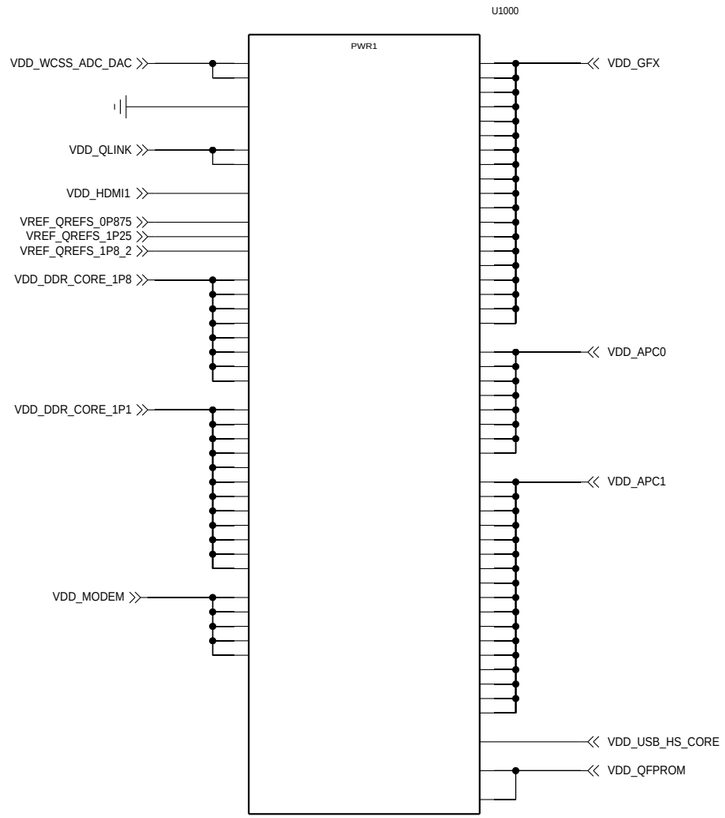

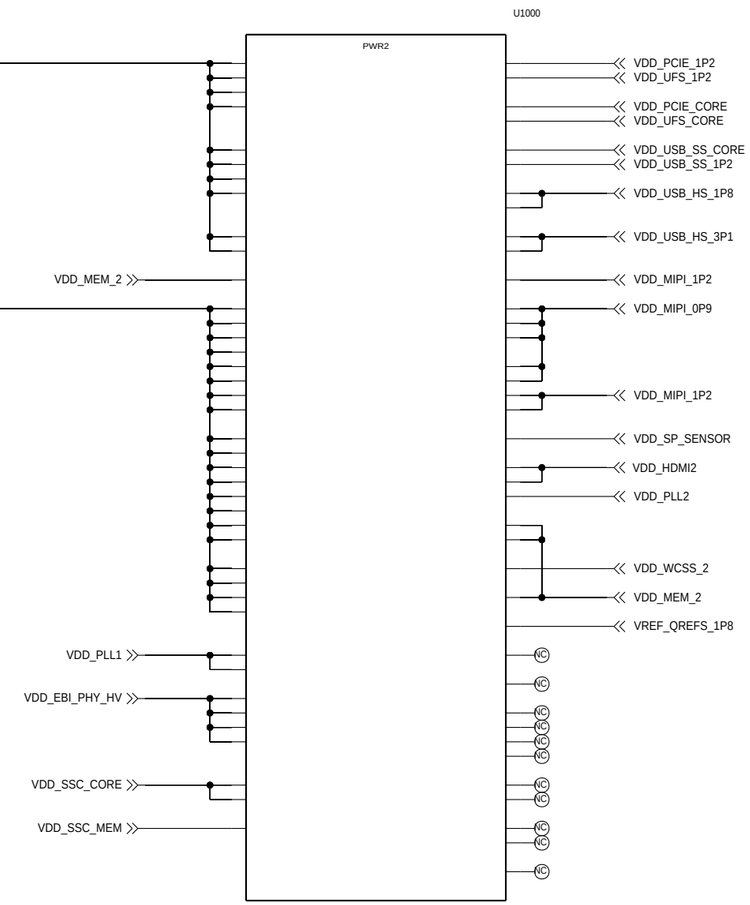

APPROVALS	MOTOROLA MOBILE DEVICES	
ENGINEER:	BLOCK TITLE:	
LAST MODIFIED BY:		
MOTOROLA CONFIDENTIAL RESTRICTED	B PROJECT NAME	REV
THE DRAWING ON THIS PRINT AND INFORMATION THEREWITH ARE PROPRIETARY TO MOTOROLA AND SHALL NOT BE USED OR DISCUSSED IN WHOLE OR IN PART WITHOUT MOTOROLA'S CONSENT.	CAD FILE NAME:	

© COPYRIGHT, MOTOROLA. THIS DOES NOT IMPLY PUBLICATION

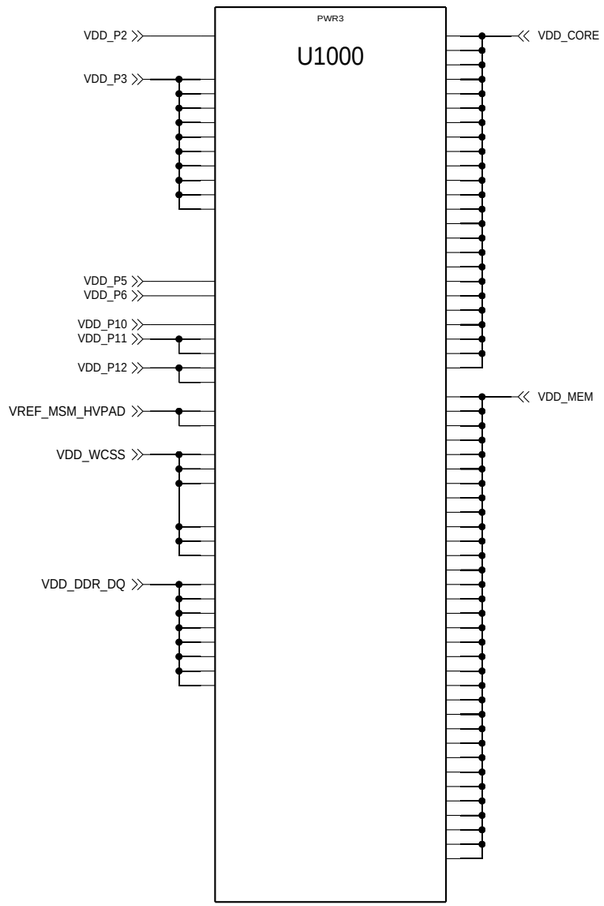

APPROVALS	MOTOROLA MOBILE DEVICES
ENGINEER:	BLOCK TITLE:
LAST MODIFIED BY:	
MOTOROLA CONFIDENTIAL RESTRICTED	B PROJECT NAME / REV
	CAD FILE NAME:

THE DRAWING ON THIS PRINT AND INFORMATION THEREWITH ARE PROPRIETARY TO MOTOROLA AND SHALL NOT BE USED OR DISCUSSED IN WHOLE OR IN PART WITHOUT MOTOROLA'S CONSENT.
© COPYRIGHT, MOTOROLA. THIS DOES NOT IMPLY PUBLICATION

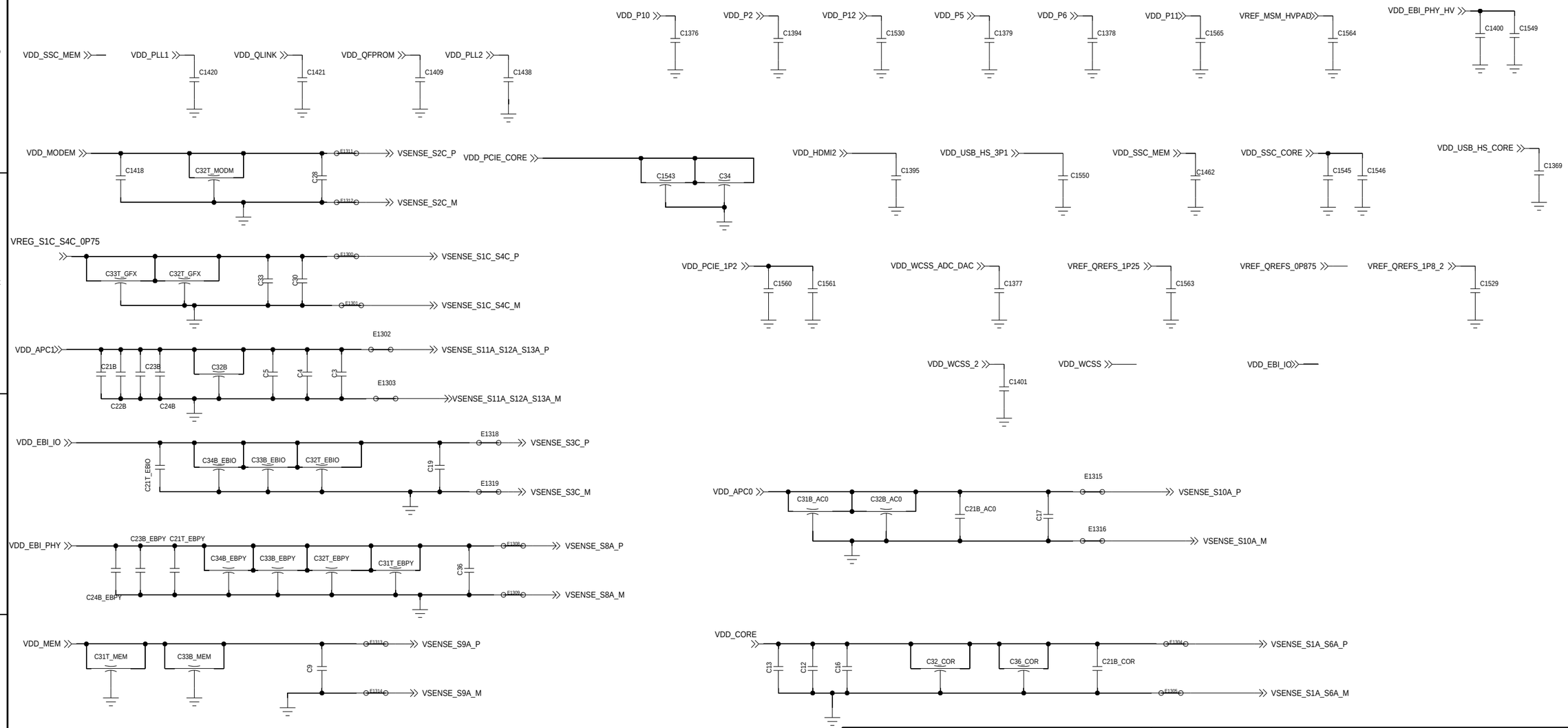

APPROVALS	MOTOROLA MOBILE DEVICES
ENGINEER:	BLOCK TITLE:
LAST MODIFIED BY:	
MOTOROLA CONFIDENTIAL RESTRICTED	B — PROJECT NAME — REV
THE DRAWING ON THIS PRINT AND INFORMATION THEREWITH ARE PROPRIETARY TO MOTOROLA AND SHALL NOT BE USED OR DISCUSSED IN WHOLE OR IN PART WITHOUT MOTOROLA'S CONSENT. © COPYRIGHT, MOTOROLA. THIS DOES NOT IMPLY PUBLICATION	CAD FILE NAME:

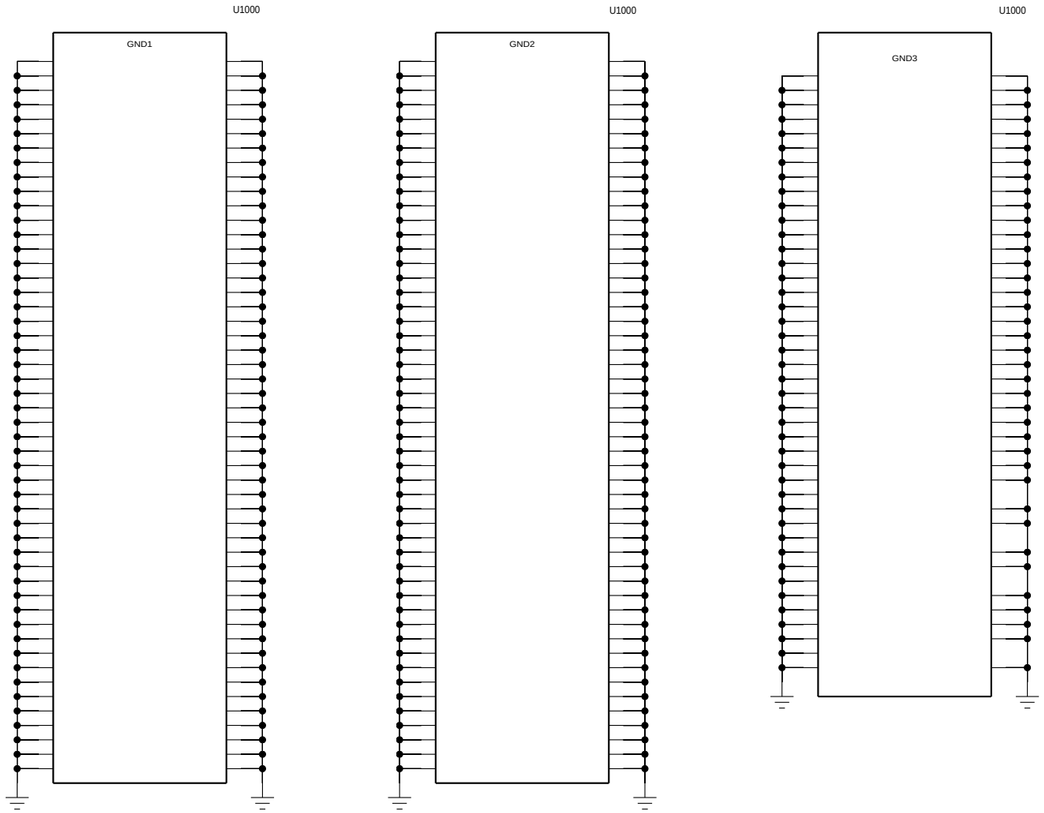

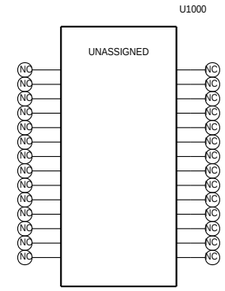

APPROVALS	MOTOROLA MOBILE DEVICES
ENGINEER:	BLOCK TITLE:
LAST MODIFIED BY:	
MOTOROLA CONFIDENTIAL RESTRICTED THE DRAWING ON THIS PRINT AND INFORMATION THEREWITH ARE PROPRIETARY TO MOTOROLA AND SHALL NOT BE USED OR DISCUSSED IN WHOLE OR IN PART WITHOUT MOTOROLA'S CONSENT. © COPYRIGHT, MOTOROLA. THIS DOES NOT IMPLY PUBLICATION	B PROJECT NAME — REV
	CAD FILE NAME:

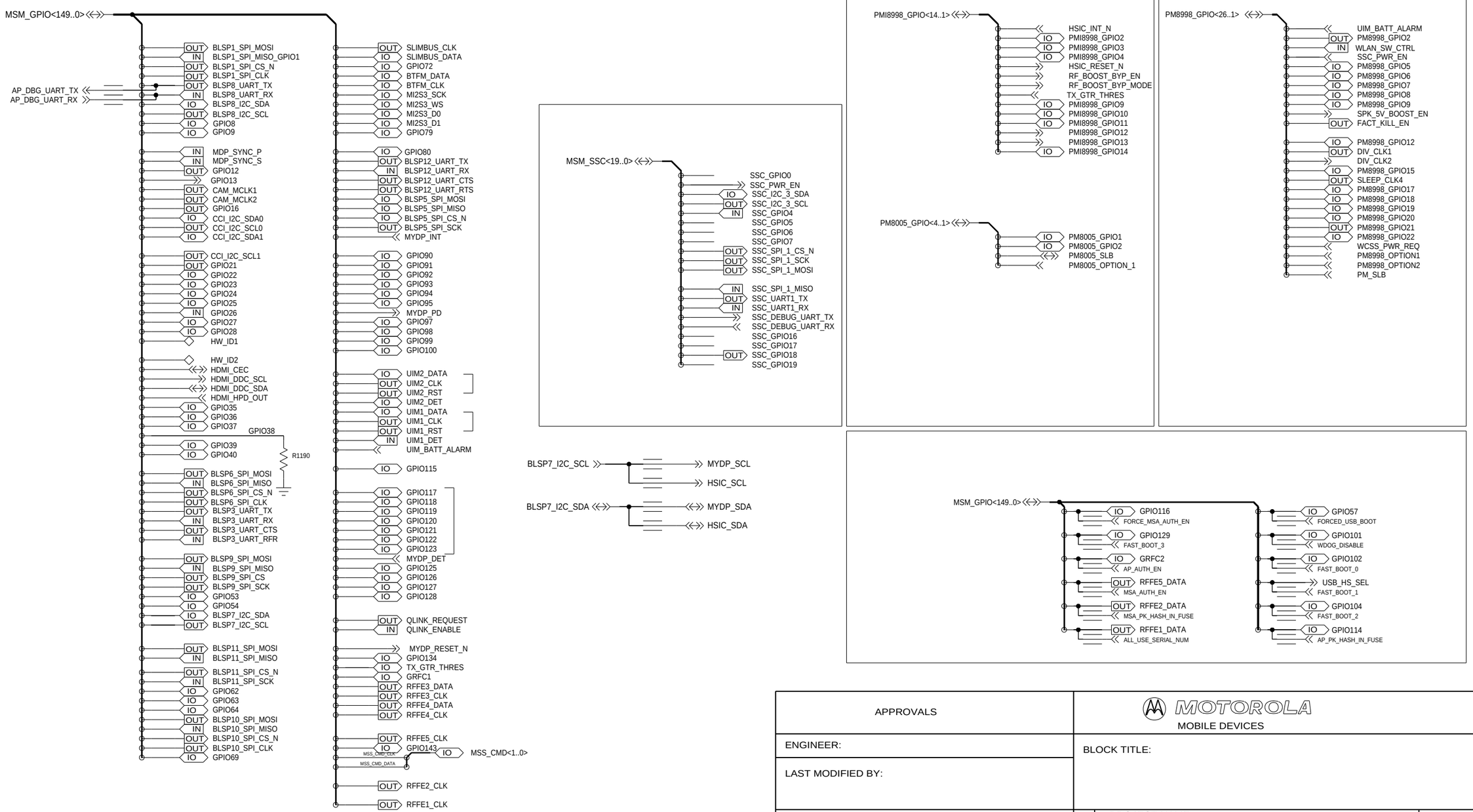

APPROVALS	MOTOROLA MOBILE DEVICES
ENGINEER:	BLOCK TITLE:
LAST MODIFIED BY:	

MOTOROLA CONFIDENTIAL RESTRICTED

THE DRAWING ON THIS PRINT AND INFORMATION THEREWITH ARE PROPRIETARY TO MOTOROLA AND SHALL NOT BE USED OR DISCUSSED IN WHOLE OR IN PART WITHOUT MOTOROLA'S CONSENT.

© COPYRIGHT, MOTOROLA. THIS DOES NOT IMPLY PUBLICATION

B	PROJECT NAME	REV
CAD FILE NAME:		

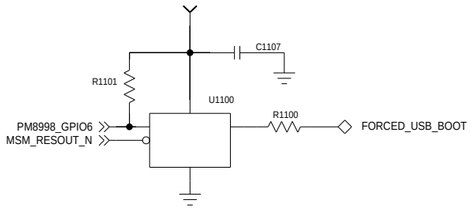

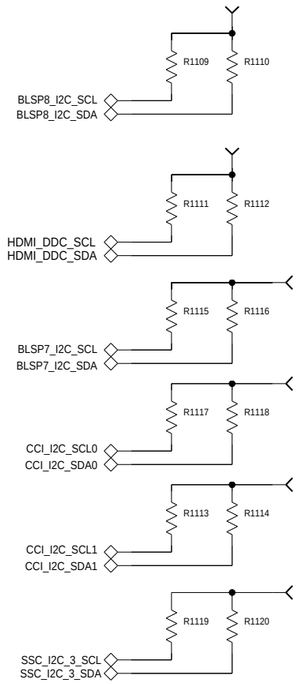

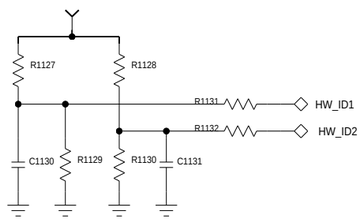

APPROVALS	MOTOROLA MOBILE DEVICES	
ENGINEER:	BLOCK TITLE:	
LAST MODIFIED BY:		
MOTOROLA CONFIDENTIAL RESTRICTED THE DRAWING ON THIS PRINT AND INFORMATION THEREWITH ARE PROPRIETARY TO MOTOROLA AND SHALL NOT BE USED OR DISCUSSED IN WHOLE OR IN PART WITHOUT MOTOROLA'S CONSENT. © COPYRIGHT, MOTOROLA. THIS DOES NOT IMPLY PUBLICATION	B PROJECT NAME	REV
	CAD FILE NAME:	

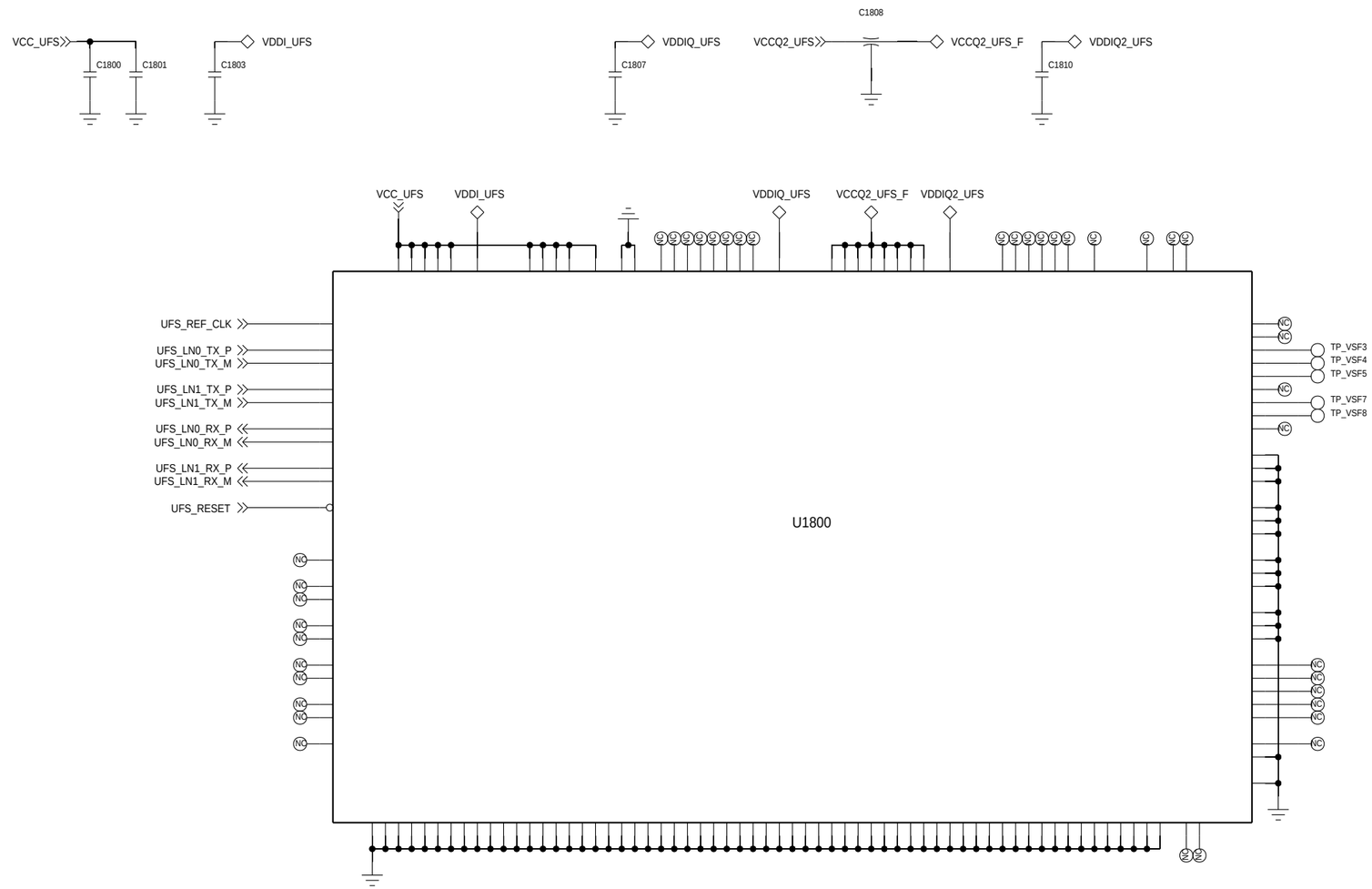

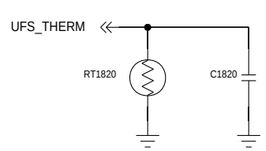

APPROVALS	MOTOROLA MOBILE DEVICES
ENGINEER:	BLOCK TITLE:
LAST MODIFIED BY:	
MOTOROLA CONFIDENTIAL RESTRICTED	B — PROJECT NAME — REV
THE DRAWING ON THIS PRINT AND INFORMATION THEREWITH ARE PROPRIETARY TO MOTOROLA AND SHALL NOT BE USED OR DISCUSSED IN WHOLE OR IN PART WITHOUT MOTOROLA'S CONSENT.	CAD FILE NAME:

© COPYRIGHT, MOTOROLA. THIS DOES NOT IMPLY PUBLICATION

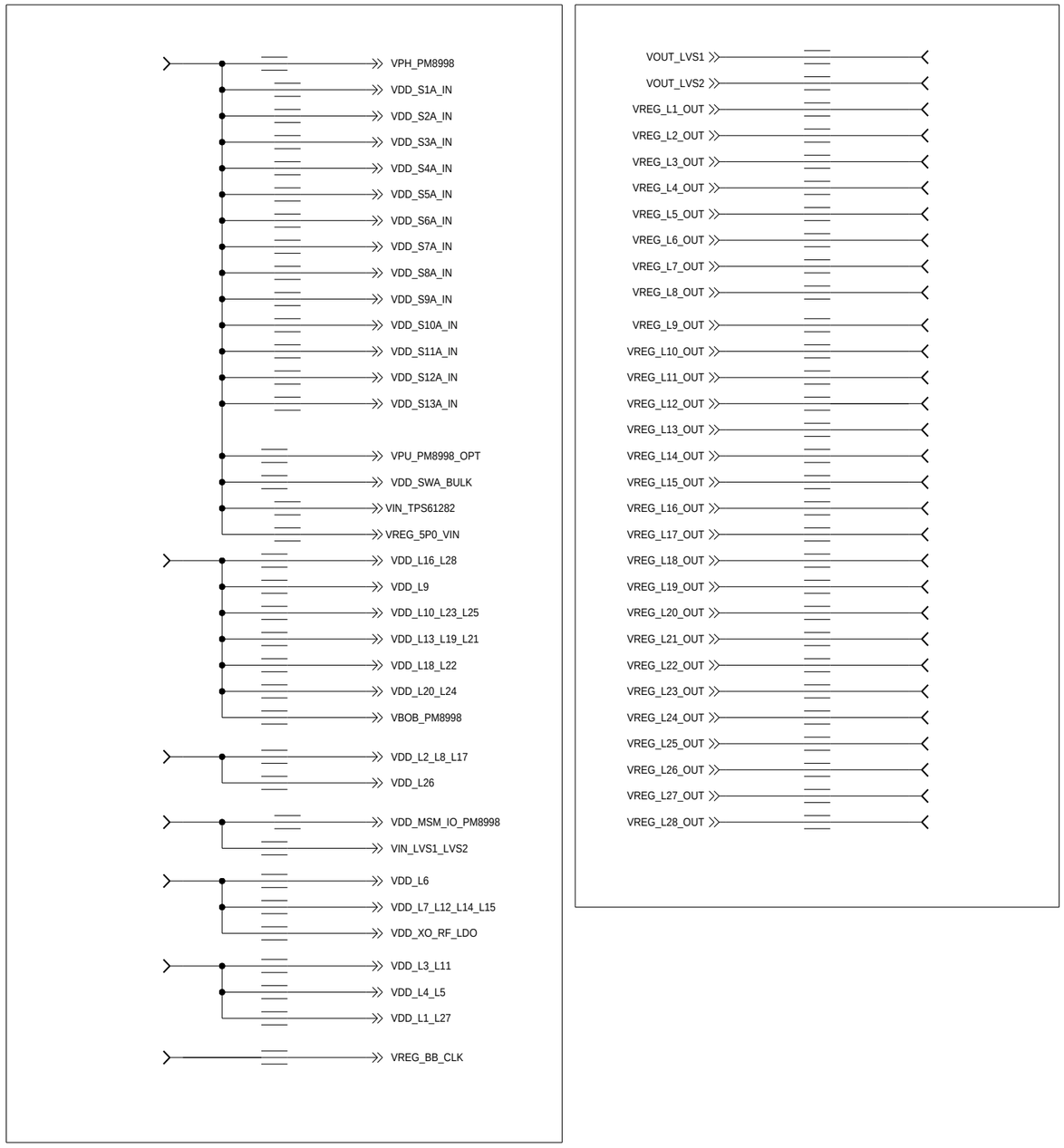

APPROVALS	MOTOROLA MOBILE DEVICES	
ENGINEER:	BLOCK TITLE:	
LAST MODIFIED BY:		
MOTOROLA CONFIDENTIAL RESTRICTED	B PROJECT NAME	REV
THE DRAWING ON THIS PRINT AND INFORMATION THEREWITH ARE PROPRIETARY TO MOTOROLA AND SHALL NOT BE USED OR DISCUSSED IN WHOLE OR IN PART WITHOUT MOTOROLA'S CONSENT.	CAD FILE NAME:	

© COPYRIGHT, MOTOROLA. THIS DOES NOT IMPLY PUBLICATION

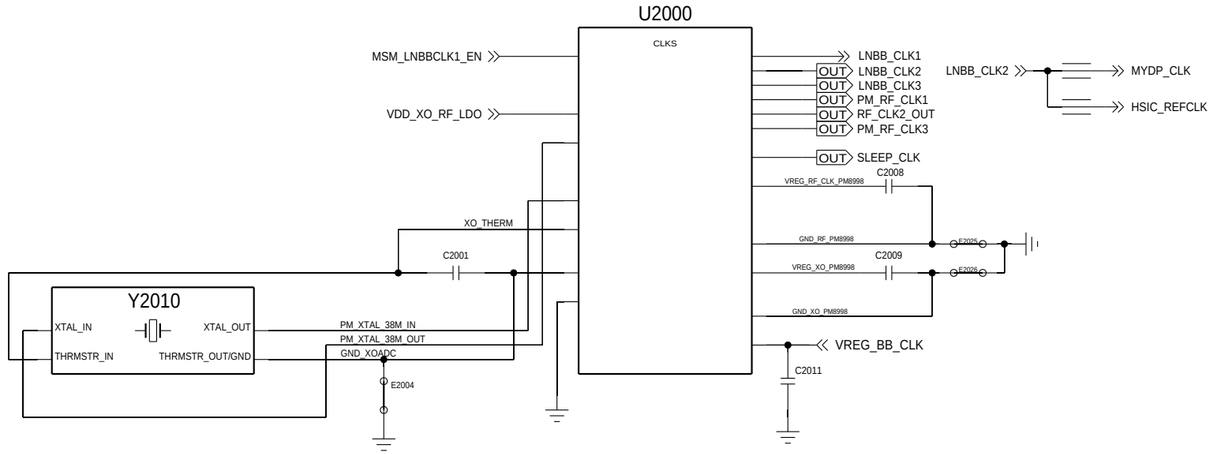

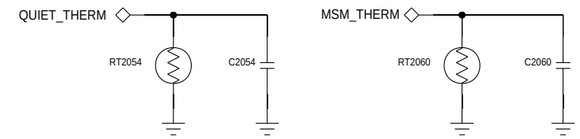

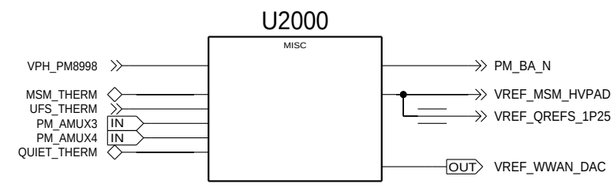

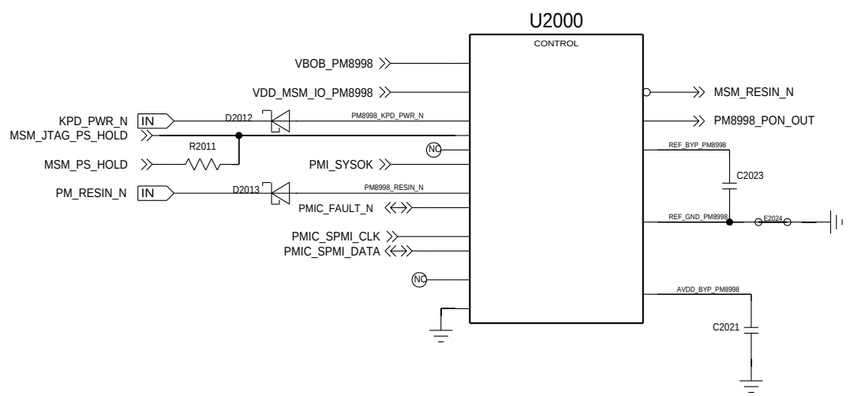

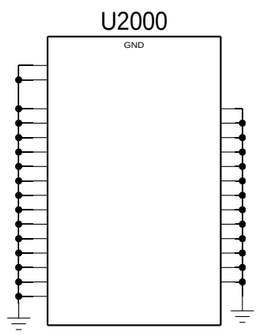

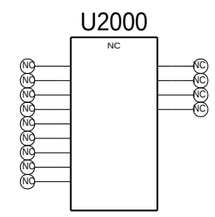

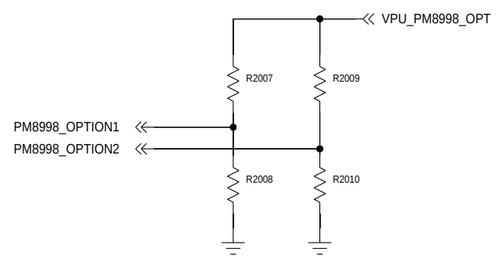

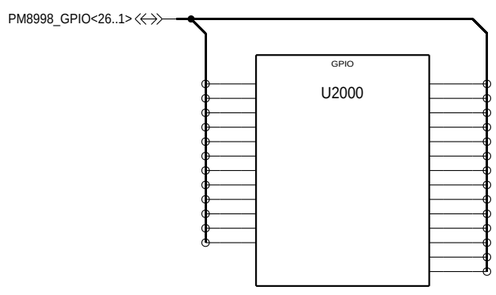

APPROVALS	MOTOROLA MOBILE DEVICES	
ENGINEER:	BLOCK TITLE:	
LAST MODIFIED BY:		
MOTOROLA CONFIDENTIAL RESTRICTED	B PROJECT NAME	REV
THE DRAWING ON THIS PRINT AND INFORMATION THEREWITH ARE PROPRIETARY TO MOTOROLA AND SHALL NOT BE USED OR DISCUSSED IN WHOLE OR IN PART WITHOUT MOTOROLA'S CONSENT.	CAD FILE NAME:	

© COPYRIGHT, MOTOROLA. THIS DOES NOT IMPLY PUBLICATION

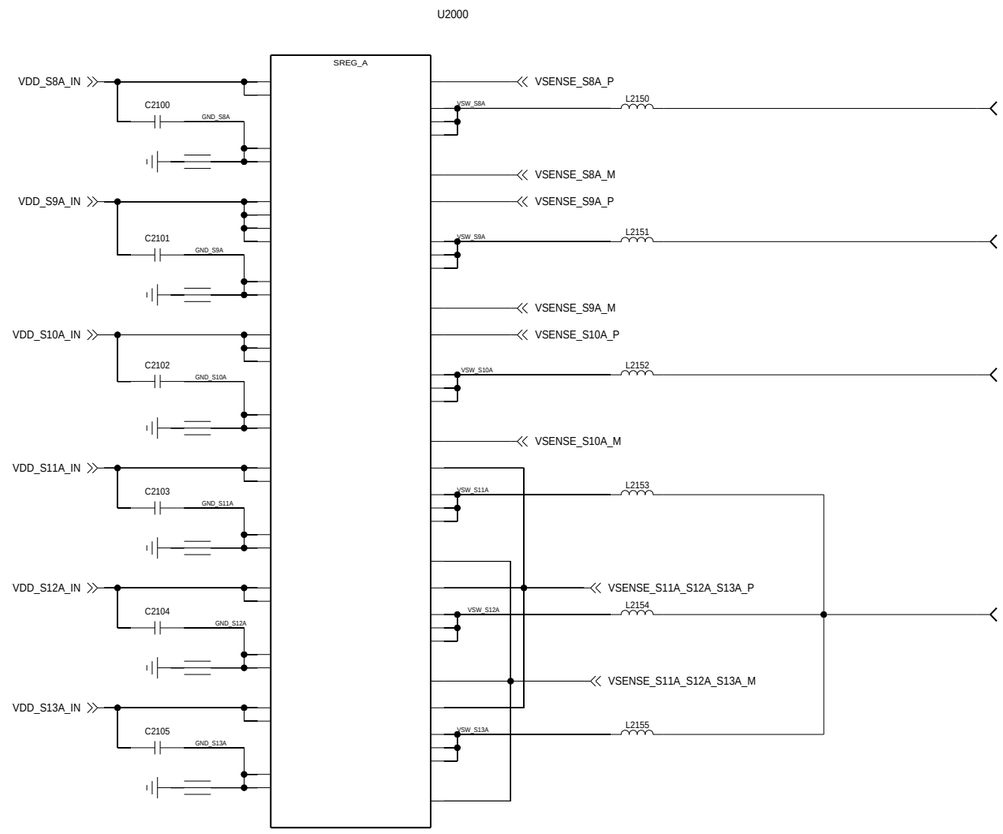

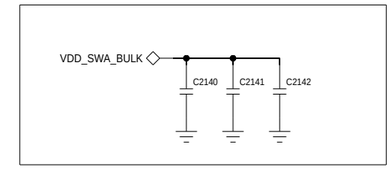

APPROVALS	MOTOROLA MOBILE DEVICES	
ENGINEER:	BLOCK TITLE:	
LAST MODIFIED BY:		
MOTOROLA CONFIDENTIAL RESTRICTED THE DRAWING ON THIS PRINT AND INFORMATION THEREWITH ARE PROPRIETARY TO MOTOROLA AND SHALL NOT BE USED OR DISCUSSED IN WHOLE OR IN PART WITHOUT MOTOROLA'S CONSENT. © COPYRIGHT, MOTOROLA. THIS DOES NOT IMPLY PUBLICATION	B PROJECT NAME	REV
	CAD FILE NAME:	

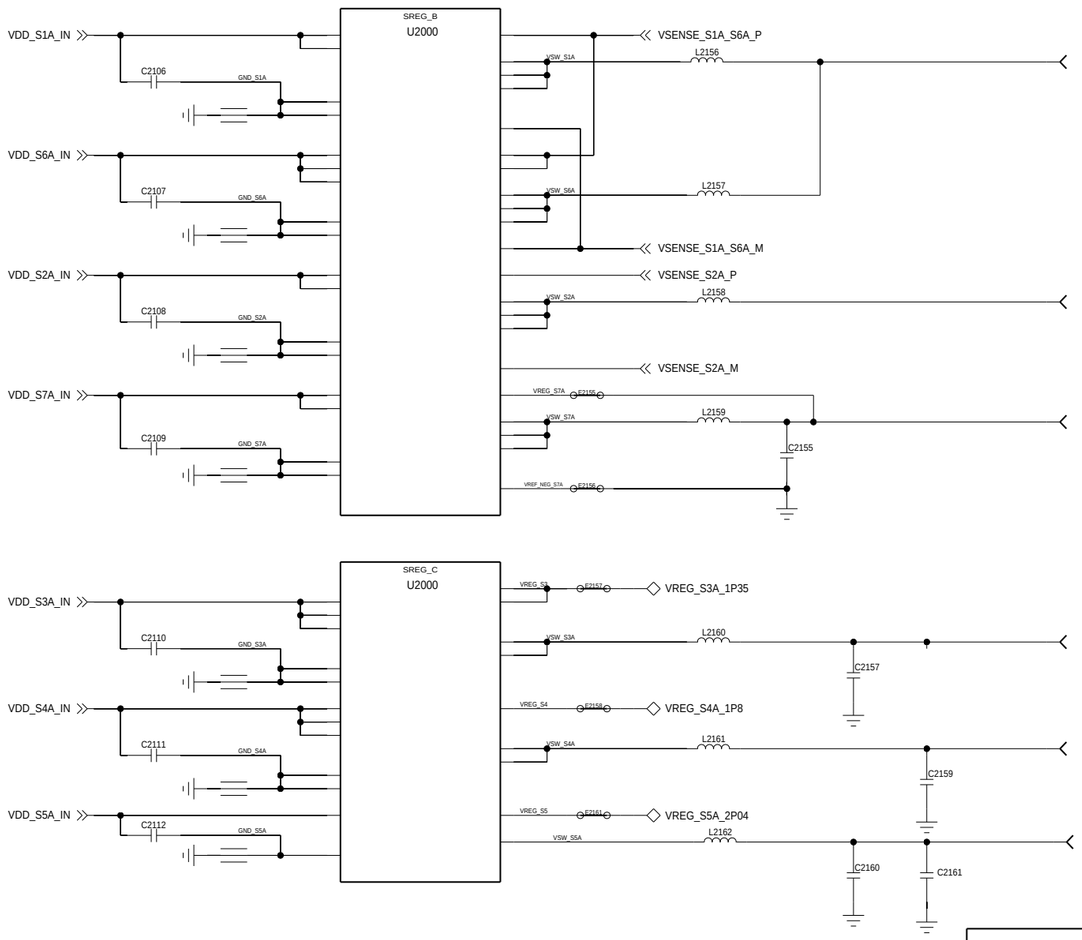

APPROVALS	MOTOROLA MOBILE DEVICES
ENGINEER:	BLOCK TITLE:
LAST MODIFIED BY:	
MOTOROLA CONFIDENTIAL RESTRICTED	B — PROJECT NAME — REV
	CAD FILE NAME:

THE DRAWING ON THIS PRINT AND INFORMATION THEREWITH ARE PROPRIETARY TO MOTOROLA AND SHALL NOT BE USED OR DISCUSSED IN WHOLE OR IN PART WITHOUT MOTOROLA'S CONSENT.
© COPYRIGHT, MOTOROLA. THIS DOES NOT IMPLY PUBLICATION

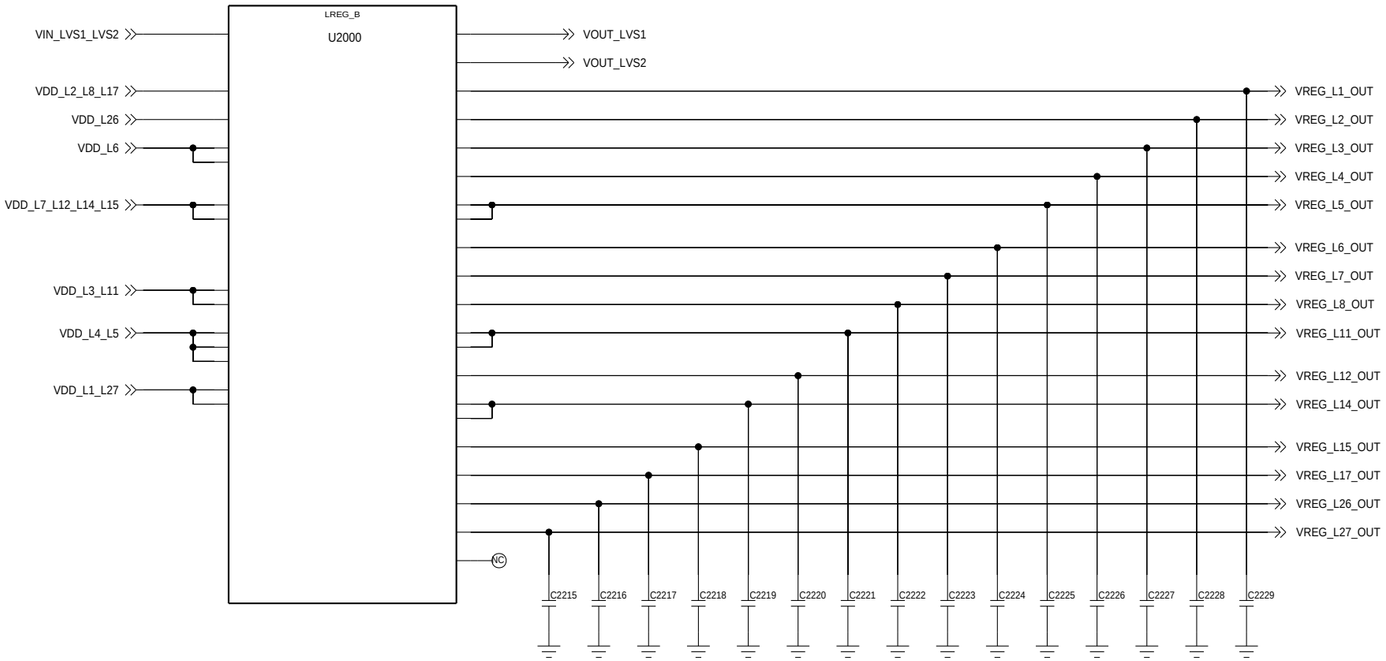

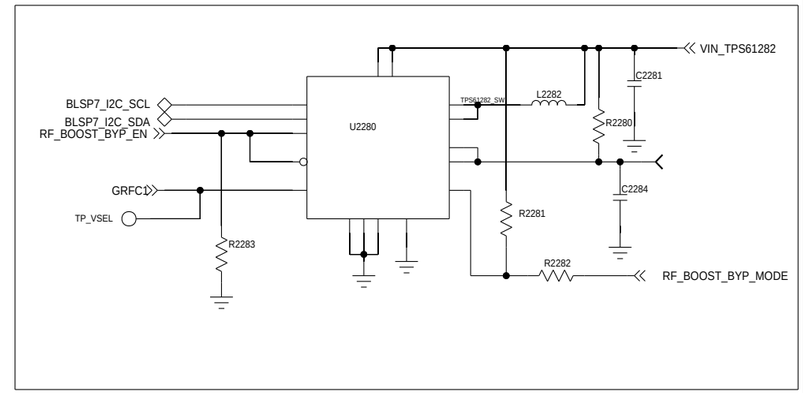

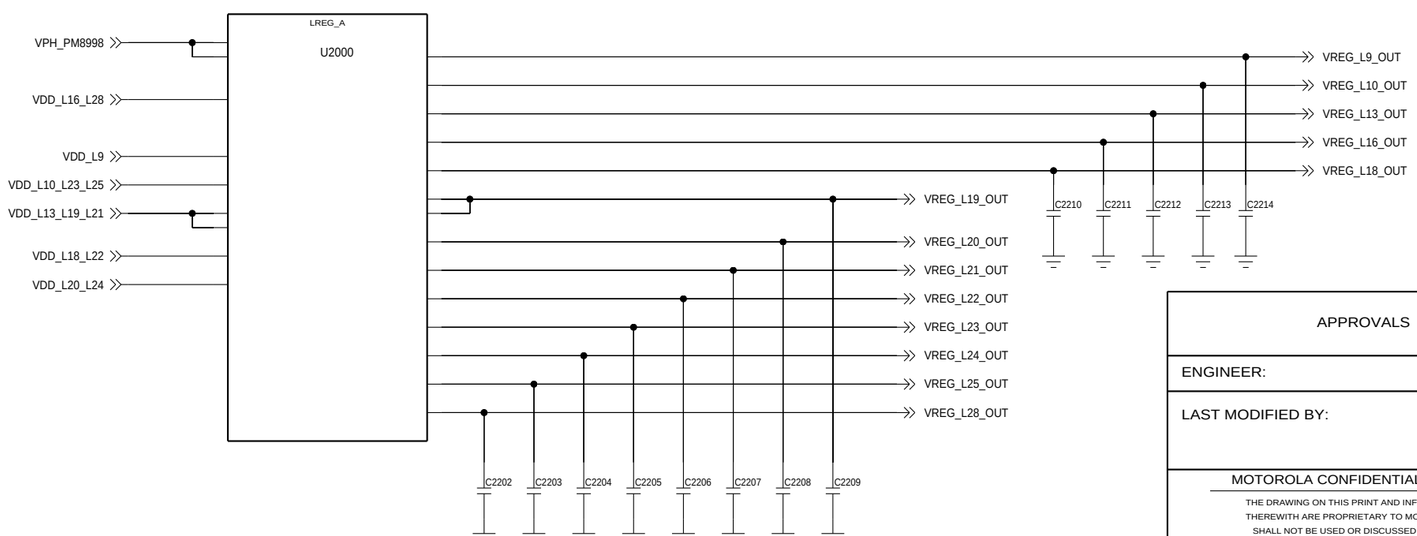

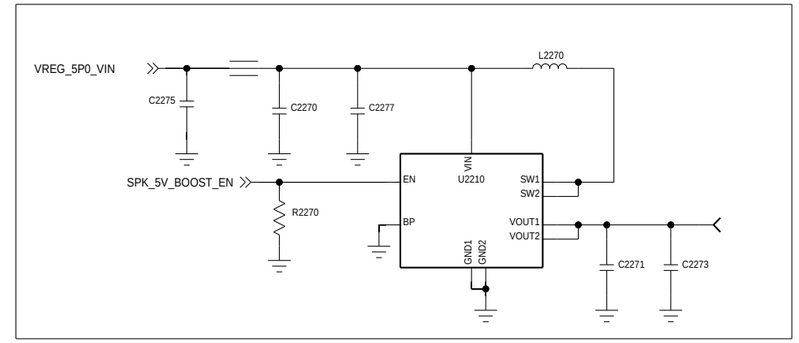

APPROVALS	MOTOROLA MOBILE DEVICES	
ENGINEER:	BLOCK TITLE:	
LAST MODIFIED BY:		
MOTOROLA CONFIDENTIAL RESTRICTED	B	PROJECT NAME / REV
THE DRAWING ON THIS PRINT AND INFORMATION THEREWITH ARE PROPRIETARY TO MOTOROLA AND SHALL NOT BE USED OR DISCUSSED IN WHOLE OR IN PART WITHOUT MOTOROLA'S CONSENT.	CAD FILE NAME:	

© COPYRIGHT, MOTOROLA. THIS DOES NOT IMPLY PUBLICATION

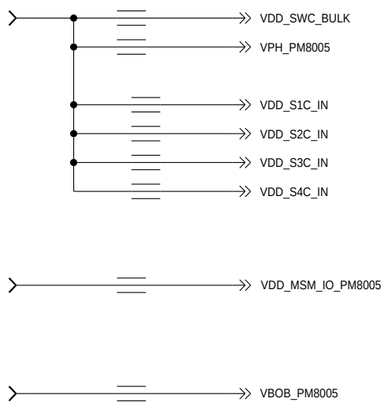

APPROVALS	MOTOROLA MOBILE DEVICES	
ENGINEER:	BLOCK TITLE:	
LAST MODIFIED BY:		
MOTOROLA CONFIDENTIAL RESTRICTED	B PROJECT NAME	REV
	CAD FILE NAME:	

THE DRAWING ON THIS PRINT AND INFORMATION THEREWITH ARE PROPRIETARY TO MOTOROLA AND SHALL NOT BE USED OR DISCUSSED IN WHOLE OR IN PART WITHOUT MOTOROLA'S CONSENT.
© COPYRIGHT, MOTOROLA. THIS DOES NOT IMPLY PUBLICATION

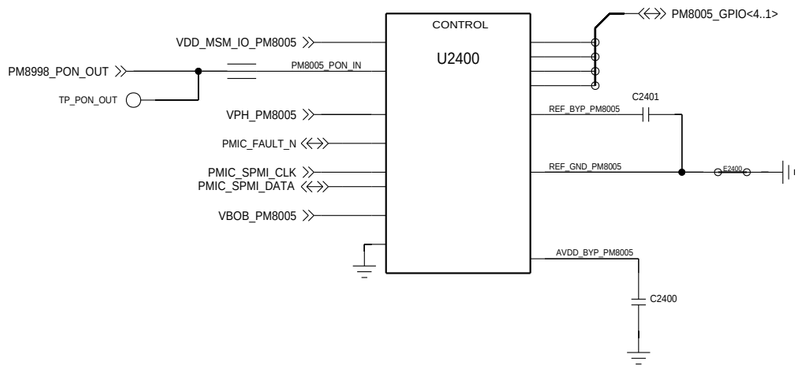

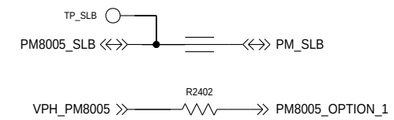

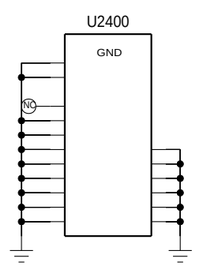

APPROVALS	MOTOROLA MOBILE DEVICES
ENGINEER:	BLOCK TITLE:
LAST MODIFIED BY:	
MOTOROLA CONFIDENTIAL RESTRICTED	B PROJECT NAME / REV
THE DRAWING ON THIS PRINT AND INFORMATION THEREWITH ARE PROPRIETARY TO MOTOROLA AND SHALL NOT BE USED OR DISCUSSED IN WHOLE OR IN PART WITHOUT MOTOROLA'S CONSENT.	CAD FILE NAME:

© COPYRIGHT, MOTOROLA. THIS DOES NOT IMPLY PUBLICATION

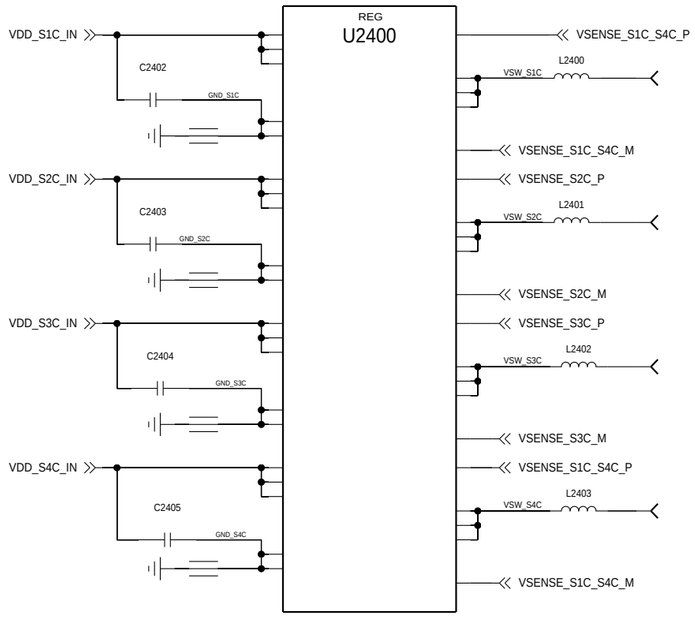

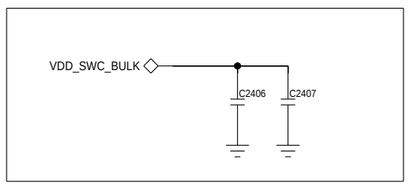

APPROVALS	MOTOROLA MOBILE DEVICES
ENGINEER:	BLOCK TITLE:
LAST MODIFIED BY:	
MOTOROLA CONFIDENTIAL RESTRICTED	B PROJECT NAME REV
	CAD FILE NAME:

THE DRAWING ON THIS PRINT AND INFORMATION THEREWITH ARE PROPRIETARY TO MOTOROLA AND SHALL NOT BE USED OR DISCUSSED IN WHOLE OR IN PART WITHOUT MOTOROLA'S CONSENT.
© COPYRIGHT, MOTOROLA. THIS DOES NOT IMPLY PUBLICATION

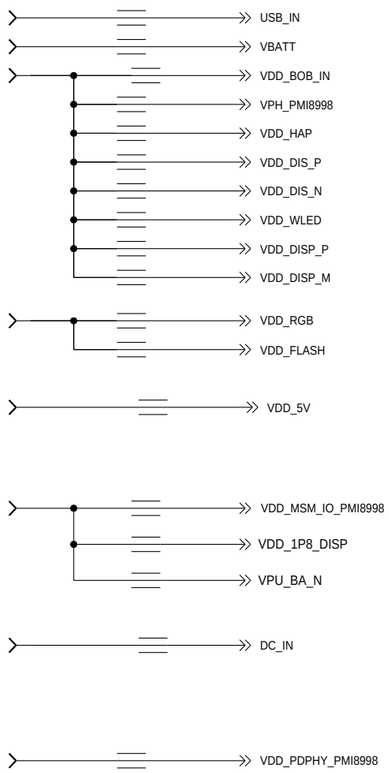

APPROVALS	MOTOROLA MOBILE DEVICES
ENGINEER:	BLOCK TITLE:
LAST MODIFIED BY:	
MOTOROLA CONFIDENTIAL RESTRICTED	B PROJECT NAME / REV
	CAD FILE NAME:

THE DRAWING ON THIS PRINT AND INFORMATION THEREWITH ARE PROPRIETARY TO MOTOROLA AND SHALL NOT BE USED OR DISCUSSED IN WHOLE OR IN PART WITHOUT MOTOROLA'S CONSENT.
© COPYRIGHT, MOTOROLA. THIS DOES NOT IMPLY PUBLICATION

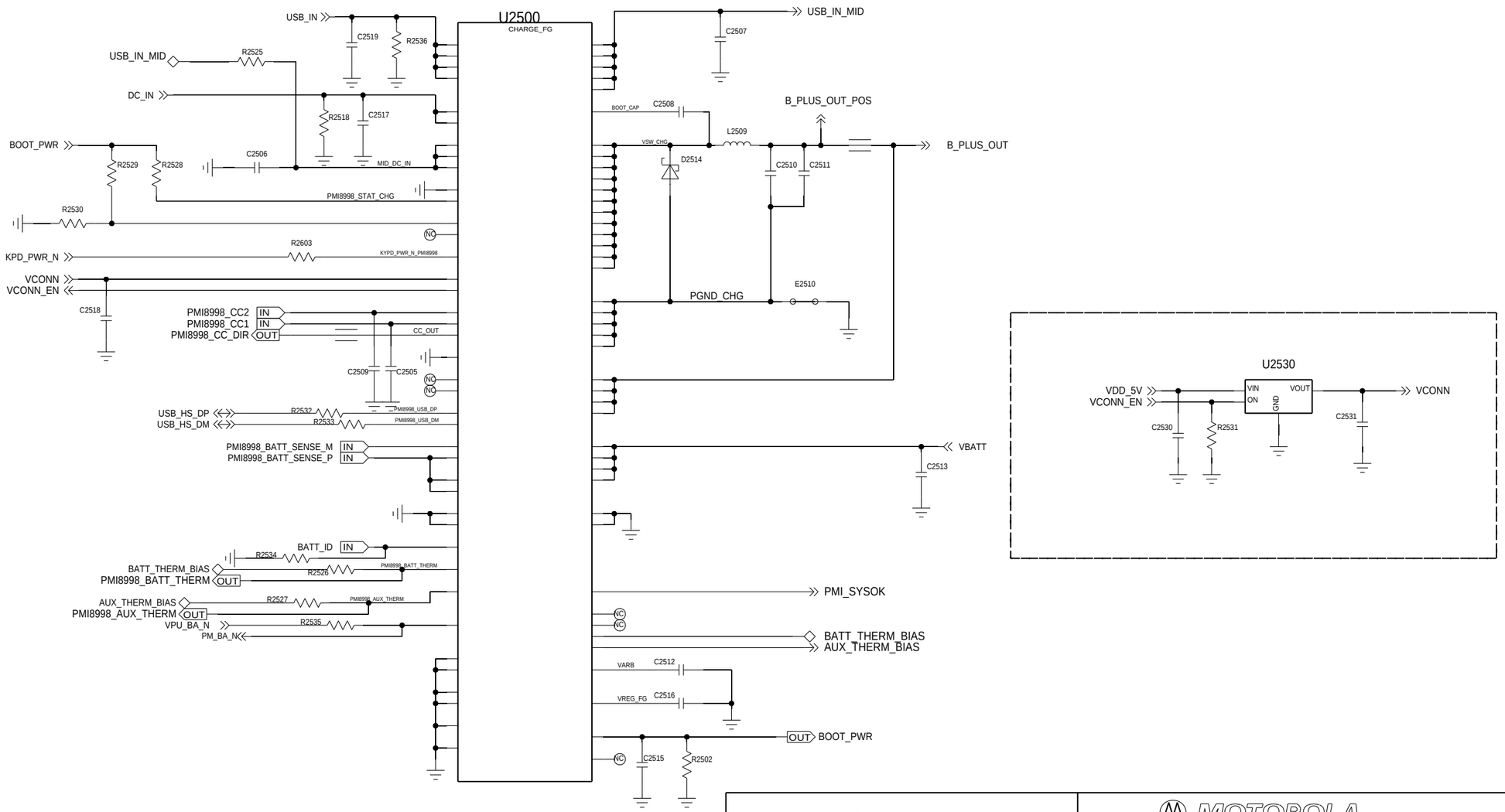

APPROVALS	MOTOROLA MOBILE DEVICES
ENGINEER:	BLOCK TITLE:
LAST MODIFIED BY:	

MOTOROLA CONFIDENTIAL RESTRICTED

THE DRAWING ON THIS PRINT AND INFORMATION THEREWITH ARE PROPRIETARY TO MOTOROLA AND SHALL NOT BE USED OR DISCUSSED IN WHOLE OR IN PART WITHOUT MOTOROLA'S CONSENT.
© COPYRIGHT, MOTOROLA. THIS DOES NOT IMPLY PUBLICATION

B	PROJECT NAME	REV
CAD FILE NAME:		

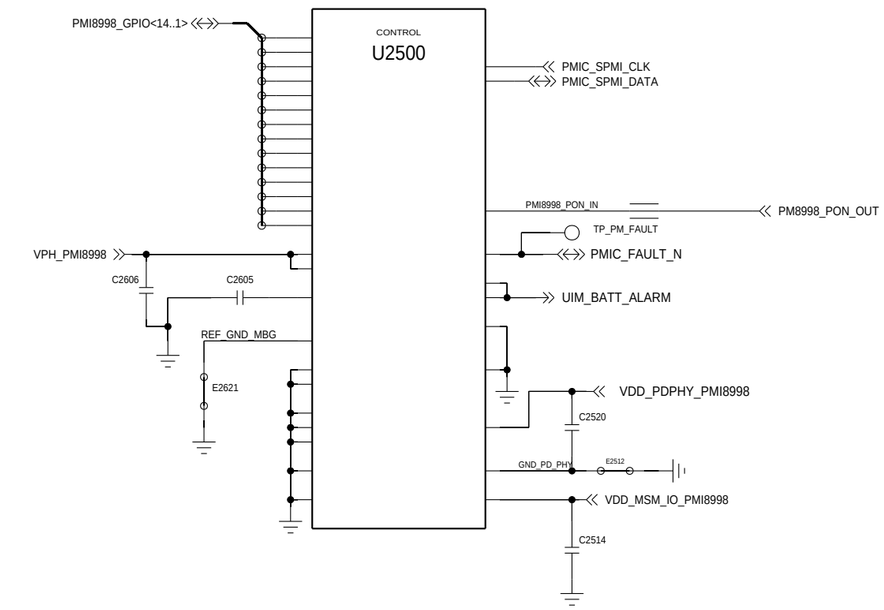

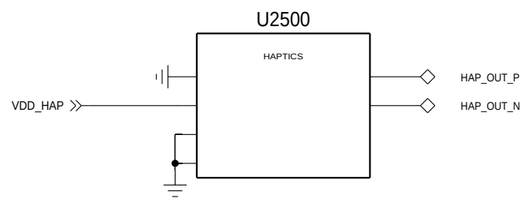

APPROVALS	MOTOROLA MOBILE DEVICES
ENGINEER:	BLOCK TITLE:
LAST MODIFIED BY:	
MOTOROLA CONFIDENTIAL RESTRICTED	B — PROJECT NAME — REV
THE DRAWING ON THIS PRINT AND INFORMATION THEREWITH ARE PROPRIETARY TO MOTOROLA AND SHALL NOT BE USED OR DISCUSSED IN WHOLE OR IN PART WITHOUT MOTOROLA'S CONSENT.	CAD FILE NAME:

© COPYRIGHT, MOTOROLA. THIS DOES NOT IMPLY PUBLICATION

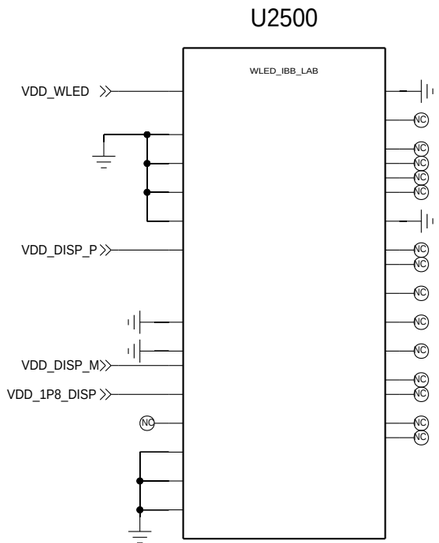

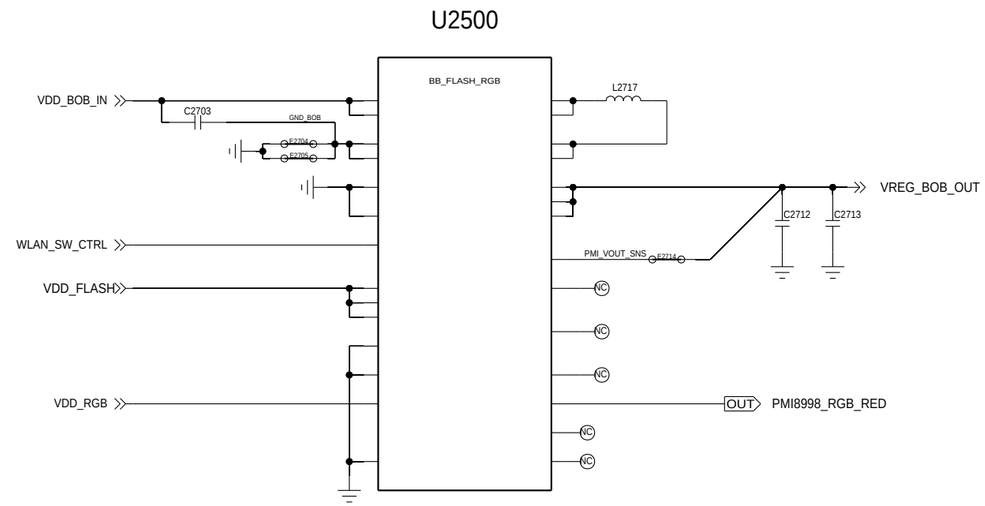

APPROVALS	MOTOROLA MOBILE DEVICES	
ENGINEER:	BLOCK TITLE:	
LAST MODIFIED BY:		
MOTOROLA CONFIDENTIAL RESTRICTED	B PROJECT NAME	REV
THE DRAWING ON THIS PRINT AND INFORMATION THEREWITH ARE PROPRIETARY TO MOTOROLA AND SHALL NOT BE USED OR DISCUSSED IN WHOLE OR IN PART WITHOUT MOTOROLA'S CONSENT.	CAD FILE NAME:	

© COPYRIGHT, MOTOROLA. THIS DOES NOT IMPLY PUBLICATION

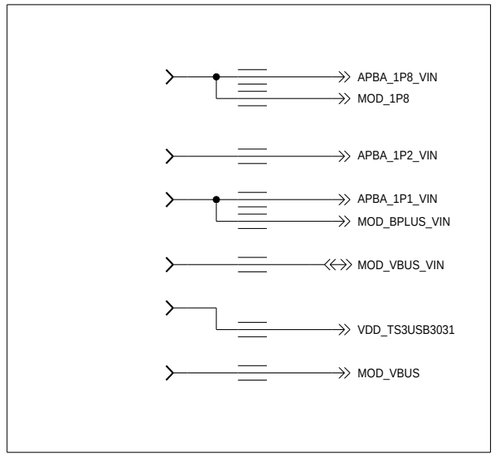

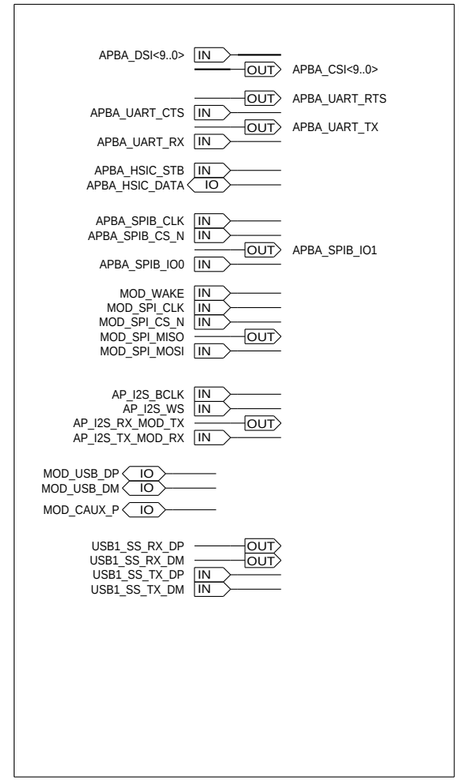

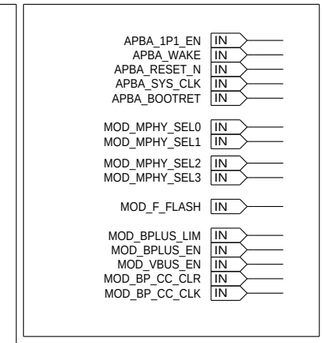

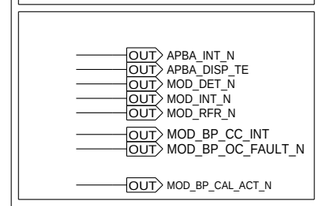

APPROVALS	MOTOROLA MOBILE DEVICES	
ENGINEER:	BLOCK TITLE:	
LAST MODIFIED BY:		
MOTOROLA CONFIDENTIAL RESTRICTED	B PROJECT NAME	REV
THE DRAWING ON THIS PRINT AND INFORMATION THEREWITH ARE PROPRIETARY TO MOTOROLA AND SHALL NOT BE USED OR DISCUSSED IN WHOLE OR IN PART WITHOUT MOTOROLA'S CONSENT.	CAD FILE NAME:	

© COPYRIGHT, MOTOROLA. THIS DOES NOT IMPLY PUBLICATION

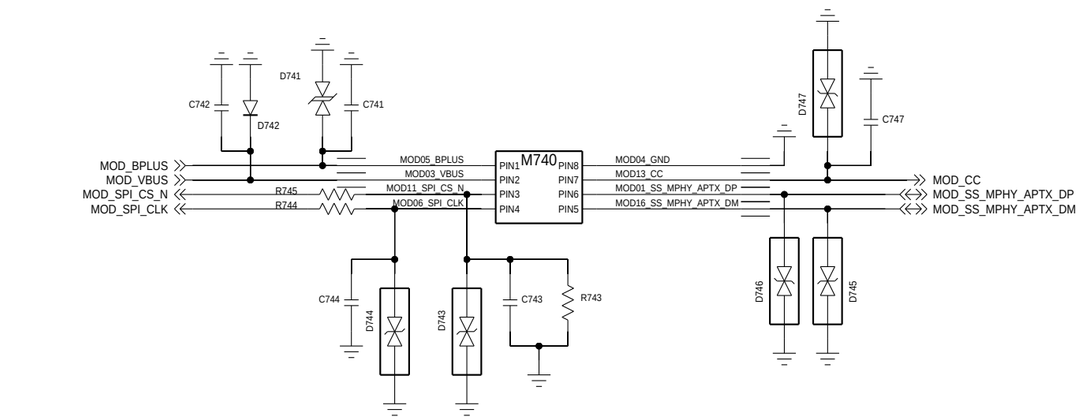

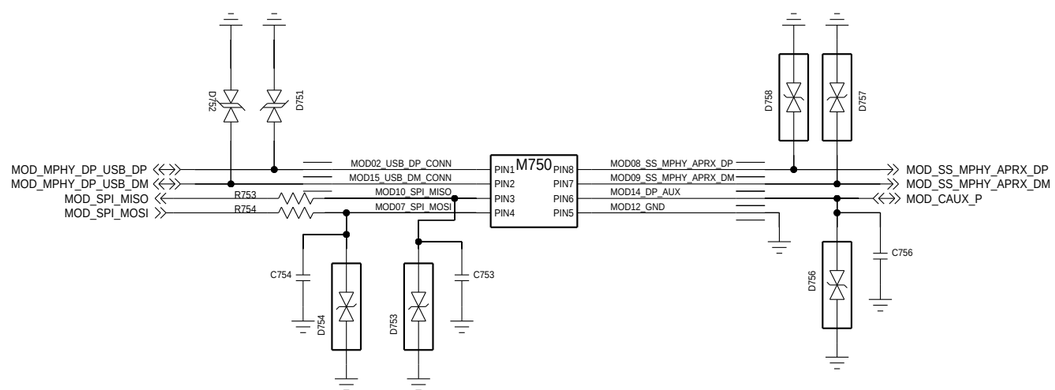

APPROVALS	MOTOROLA MOBILE DEVICES
ENGINEER:	BLOCK TITLE:
LAST MODIFIED BY:	

MOTOROLA CONFIDENTIAL RESTRICTED

THE DRAWING ON THIS PRINT AND INFORMATION THEREWITH ARE PROPRIETARY TO MOTOROLA AND SHALL NOT BE USED OR DISCUSSED IN WHOLE OR IN PART WITHOUT MOTOROLA'S CONSENT.
© COPYRIGHT, MOTOROLA. THIS DOES NOT IMPLY PUBLICATION

B	PROJECT NAME	REV
CAD FILE NAME:		

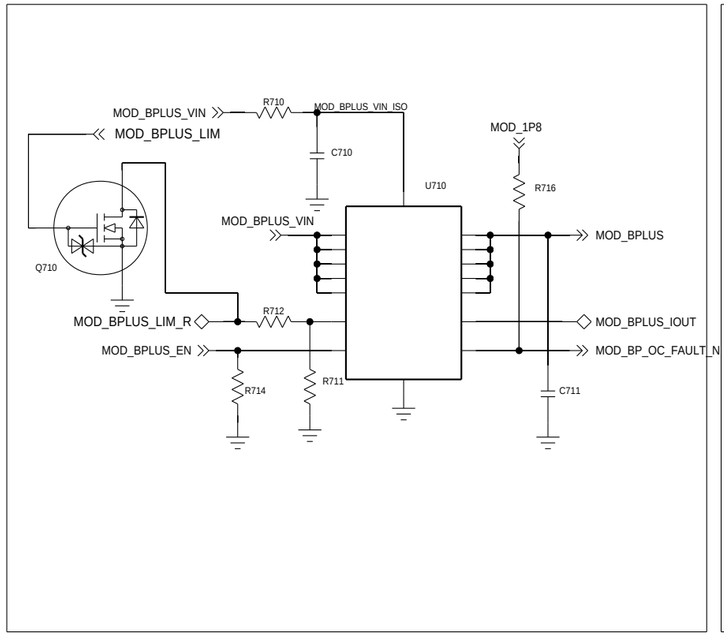

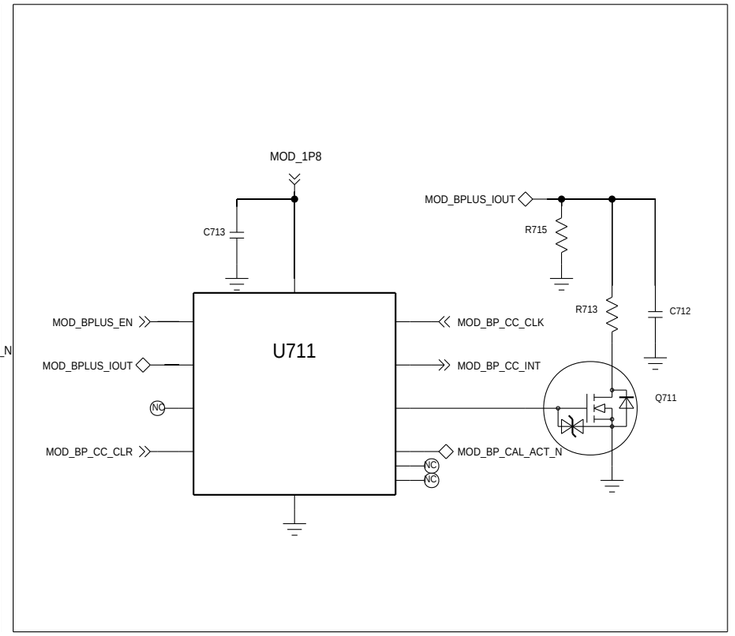

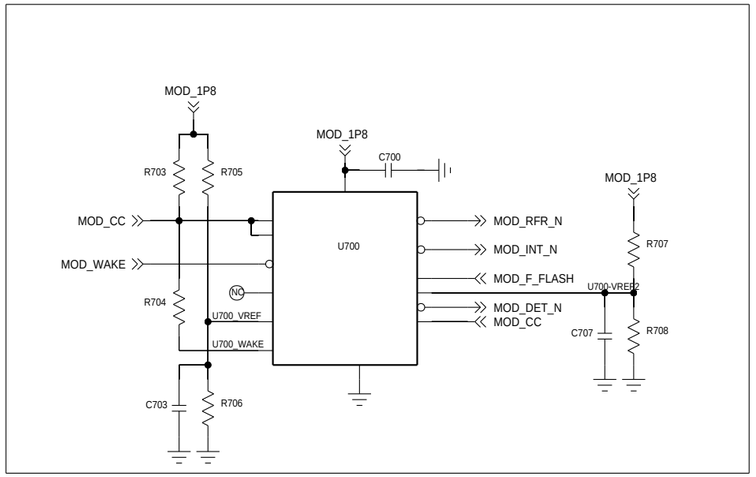

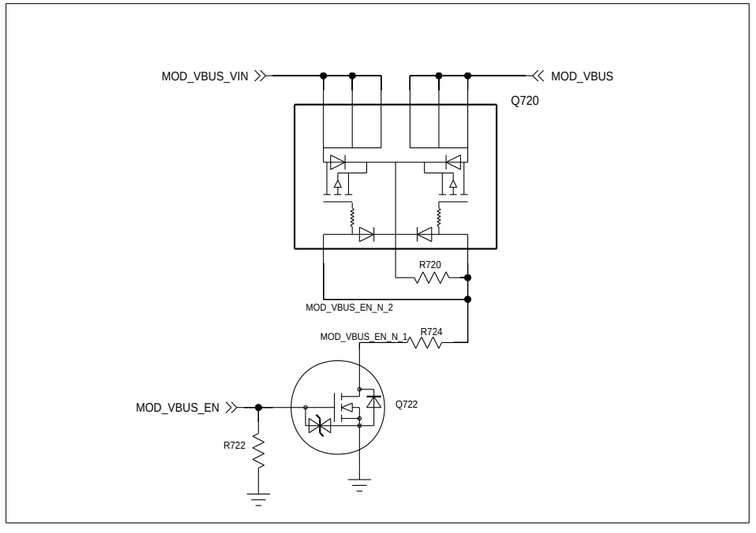

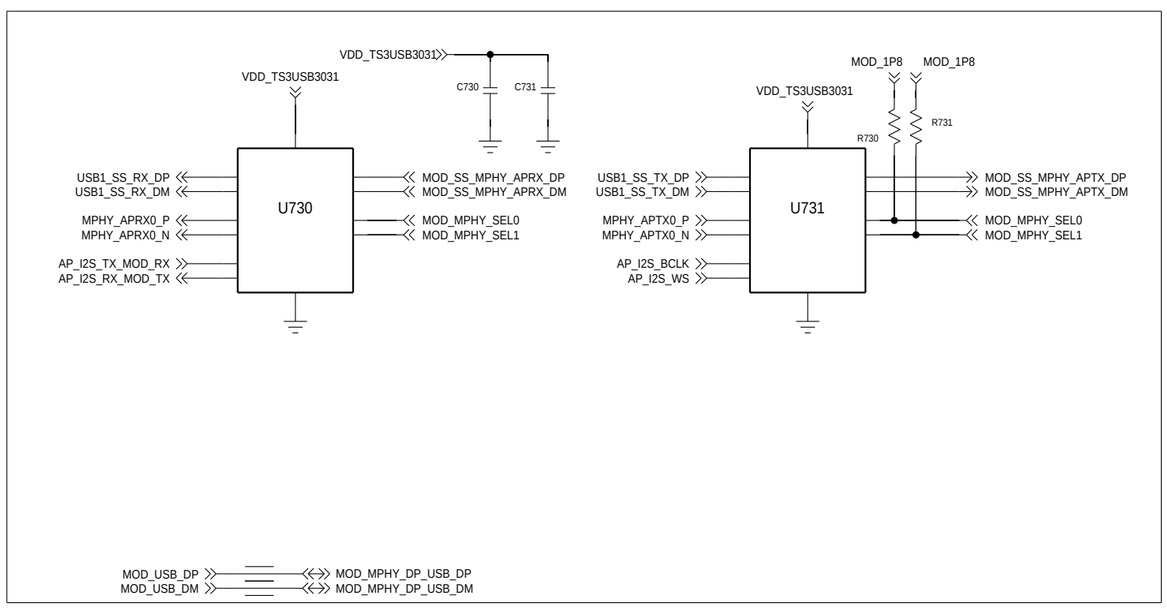

APPROVALS	MOTOROLA MOBILE DEVICES
ENGINEER:	BLOCK TITLE:
LAST MODIFIED BY:	
MOTOROLA CONFIDENTIAL RESTRICTED	B — PROJECT NAME — REV
THE DRAWING ON THIS PRINT AND INFORMATION THEREWITH ARE PROPRIETARY TO MOTOROLA AND SHALL NOT BE USED OR DISCUSSED IN WHOLE OR IN PART WITHOUT MOTOROLA'S CONSENT.	CAD FILE NAME:

© COPYRIGHT, MOTOROLA. THIS DOES NOT IMPLY PUBLICATION

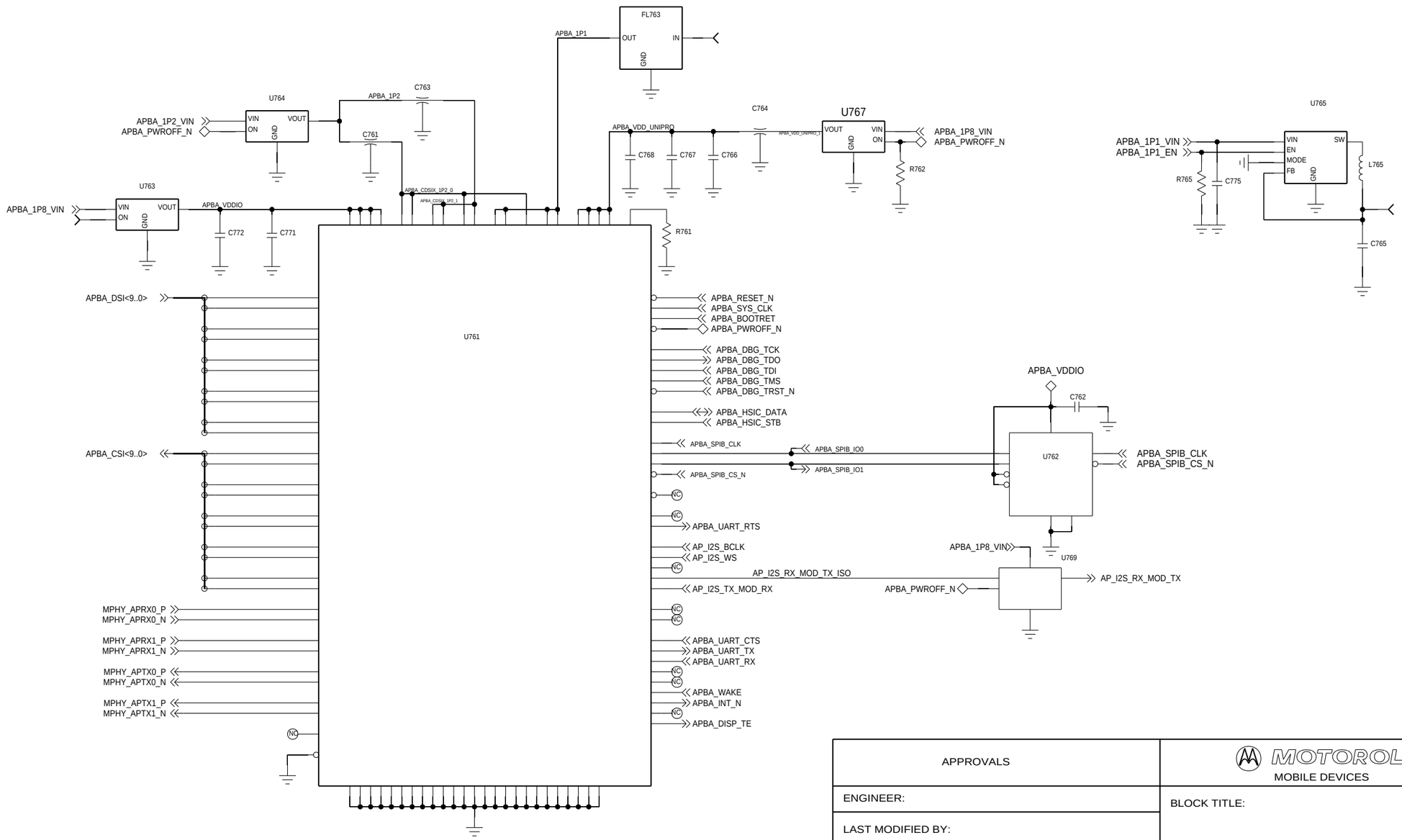

APPROVALS	MOTOROLA MOBILE DEVICES
ENGINEER:	BLOCK TITLE:
LAST MODIFIED BY:	
MOTOROLA CONFIDENTIAL RESTRICTED	B — PROJECT NAME — REV
THE DRAWING ON THIS PRINT AND INFORMATION THEREWITH ARE PROPRIETARY TO MOTOROLA AND SHALL NOT BE USED OR DISCUSSED IN WHOLE OR IN PART WITHOUT MOTOROLA'S CONSENT.	CAD FILE NAME:

© COPYRIGHT, MOTOROLA. THIS DOES NOT IMPLY PUBLICATION

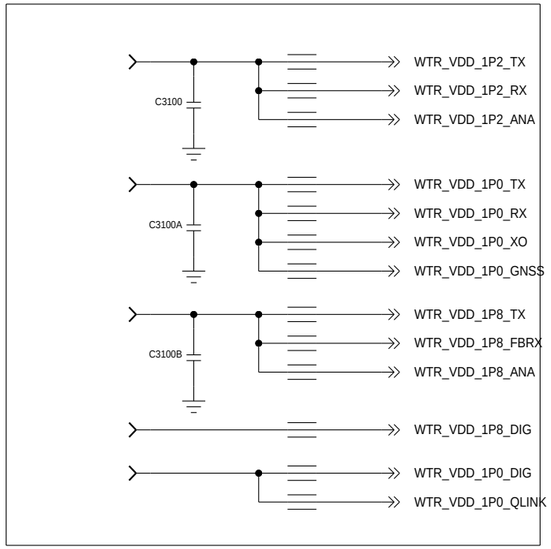

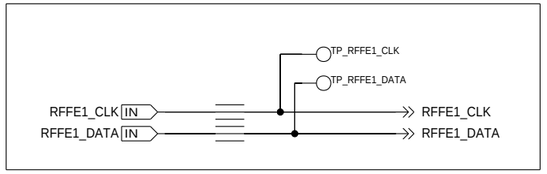

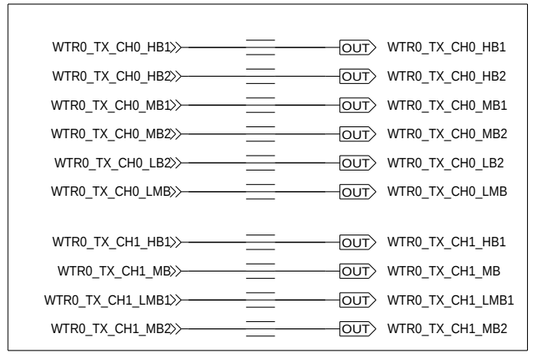

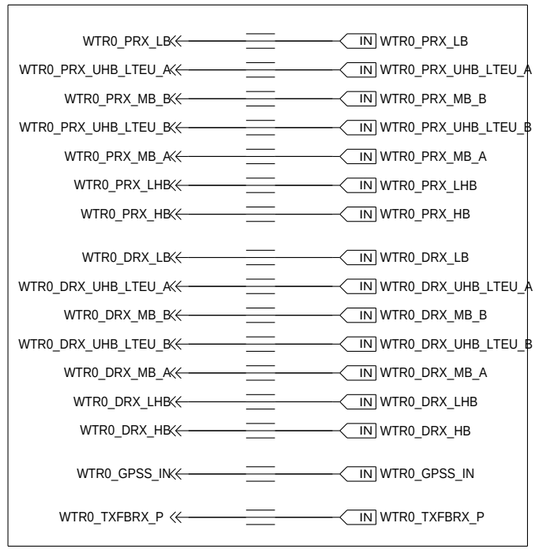

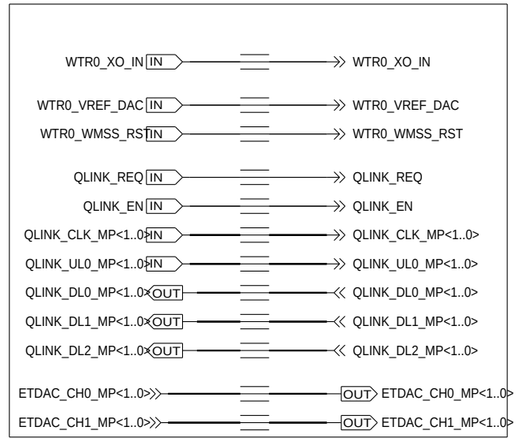

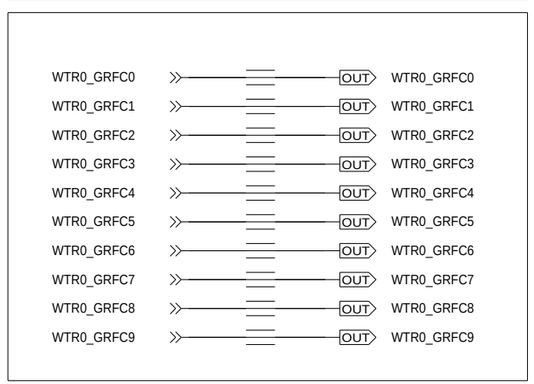

APPROVALS	MOTOROLA MOBILE DEVICES	
ENGINEER:	BLOCK TITLE:	
LAST MODIFIED BY:		
MOTOROLA CONFIDENTIAL RESTRICTED	B PROJECT NAME	REV
THE DRAWING ON THIS PRINT AND INFORMATION THEREWITH ARE PROPRIETARY TO MOTOROLA AND SHALL NOT BE USED OR DISCUSSED IN WHOLE OR IN PART WITHOUT MOTOROLA'S CONSENT.	CAD FILE NAME:	

© COPYRIGHT, MOTOROLA. THIS DOES NOT IMPLY PUBLICATION

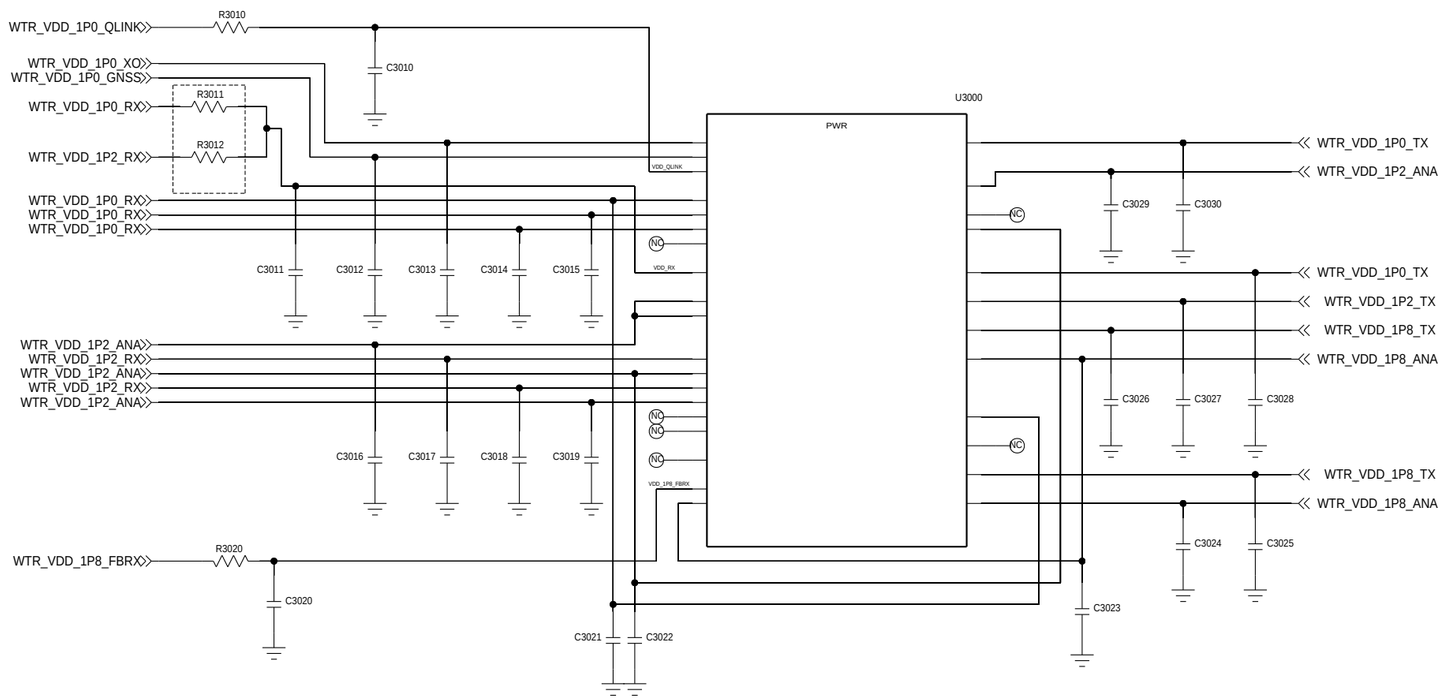

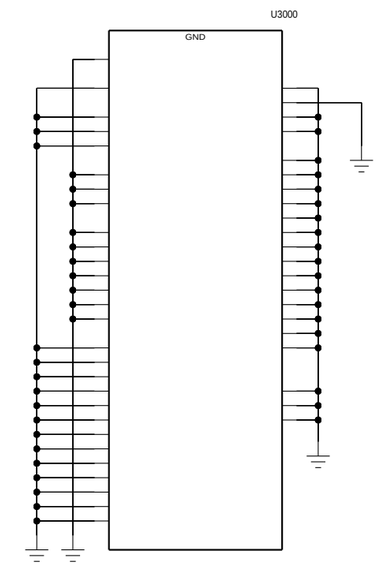

APPROVALS	MOTOROLA MOBILE DEVICES	
ENGINEER:	BLOCK TITLE:	
LAST MODIFIED BY:		
MOTOROLA CONFIDENTIAL RESTRICTED	B PROJECT NAME	REV
THE DRAWING ON THIS PRINT AND INFORMATION THEREWITH ARE PROPRIETARY TO MOTOROLA AND SHALL NOT BE USED OR DISCUSSED IN WHOLE OR IN PART WITHOUT MOTOROLA'S CONSENT.	CAD FILE NAME:	

© COPYRIGHT, MOTOROLA. THIS DOES NOT IMPLY PUBLICATION

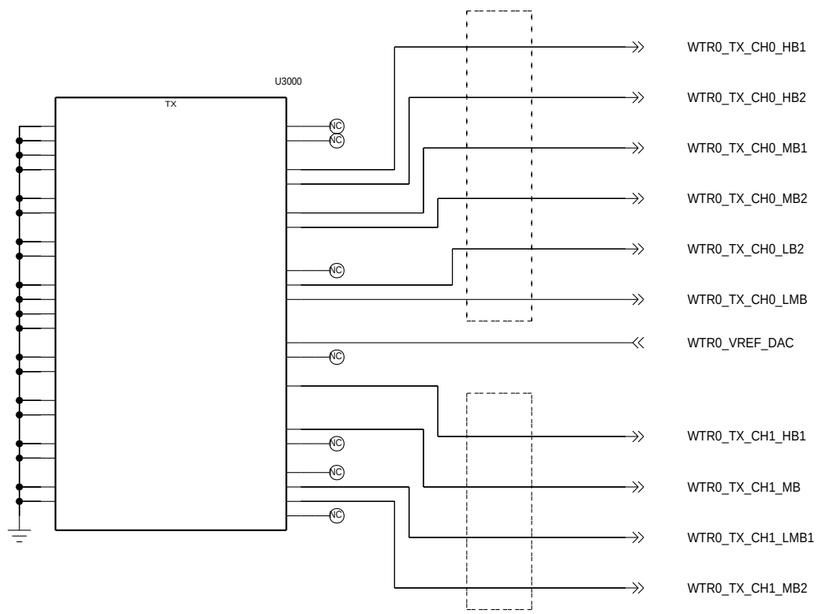

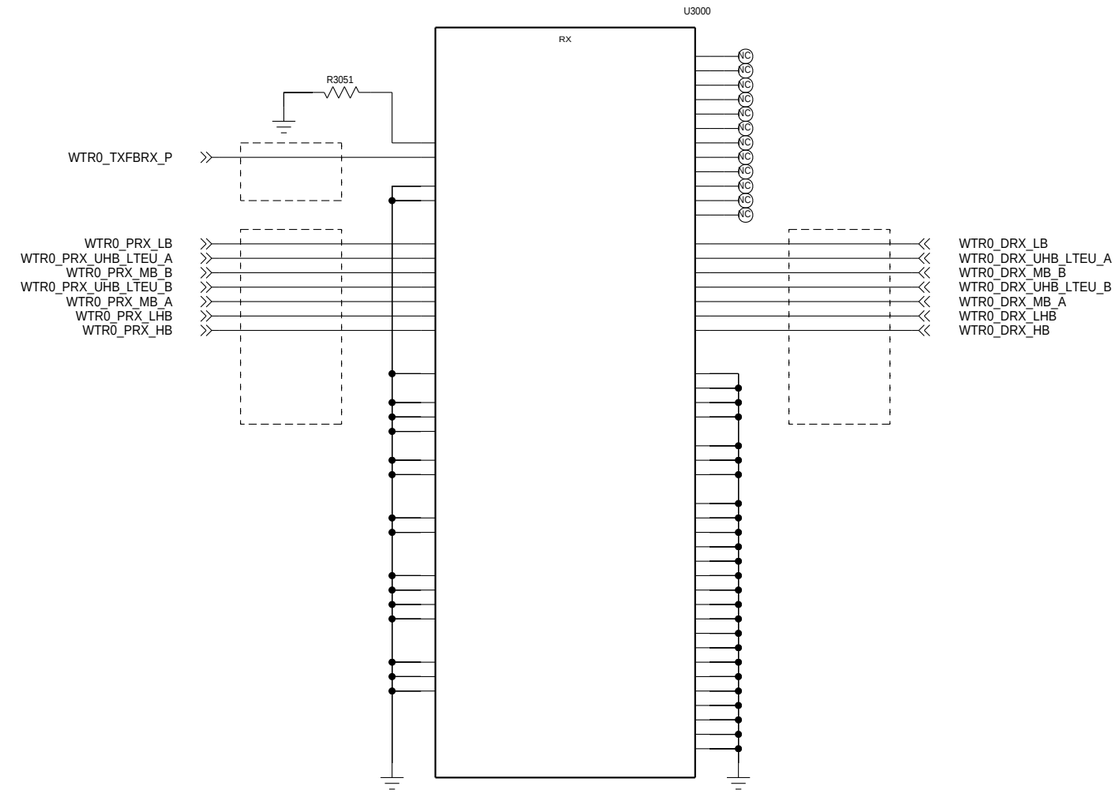

APPROVALS	MOTOROLA MOBILE DEVICES	
ENGINEER:	BLOCK TITLE:	
LAST MODIFIED BY:		
MOTOROLA CONFIDENTIAL RESTRICTED THE DRAWING ON THIS PRINT AND INFORMATION THEREWITH ARE PROPRIETARY TO MOTOROLA AND SHALL NOT BE USED OR DISCUSSED IN WHOLE OR IN PART WITHOUT MOTOROLA'S CONSENT. © COPYRIGHT, MOTOROLA. THIS DOES NOT IMPLY PUBLICATION	B PROJECT NAME	REV
	CAD FILE NAME:	

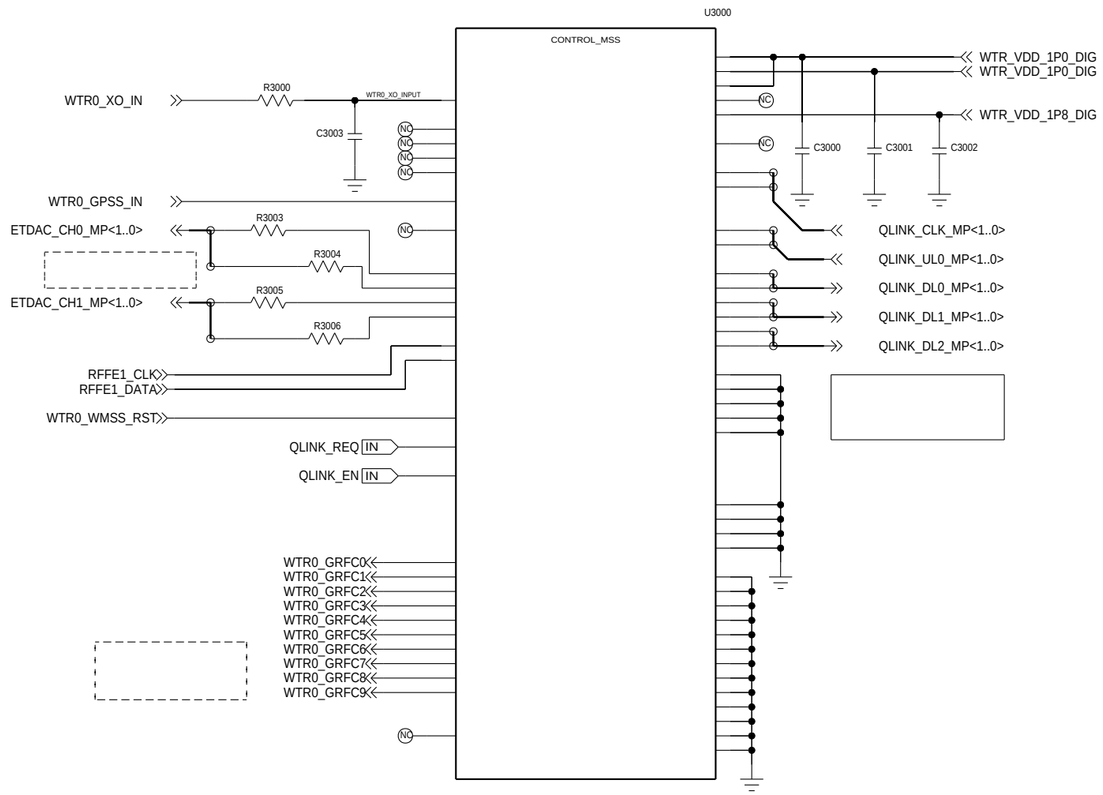

APPROVALS	MOTOROLA MOBILE DEVICES	
ENGINEER:	BLOCK TITLE:	
LAST MODIFIED BY:		
MOTOROLA CONFIDENTIAL RESTRICTED	B PROJECT NAME	REV
THE DRAWING ON THIS PRINT AND INFORMATION THEREWITH ARE PROPRIETARY TO MOTOROLA AND SHALL NOT BE USED OR DISCUSSED IN WHOLE OR IN PART WITHOUT MOTOROLA'S CONSENT.	CAD FILE NAME:	

© COPYRIGHT, MOTOROLA. THIS DOES NOT IMPLY PUBLICATION

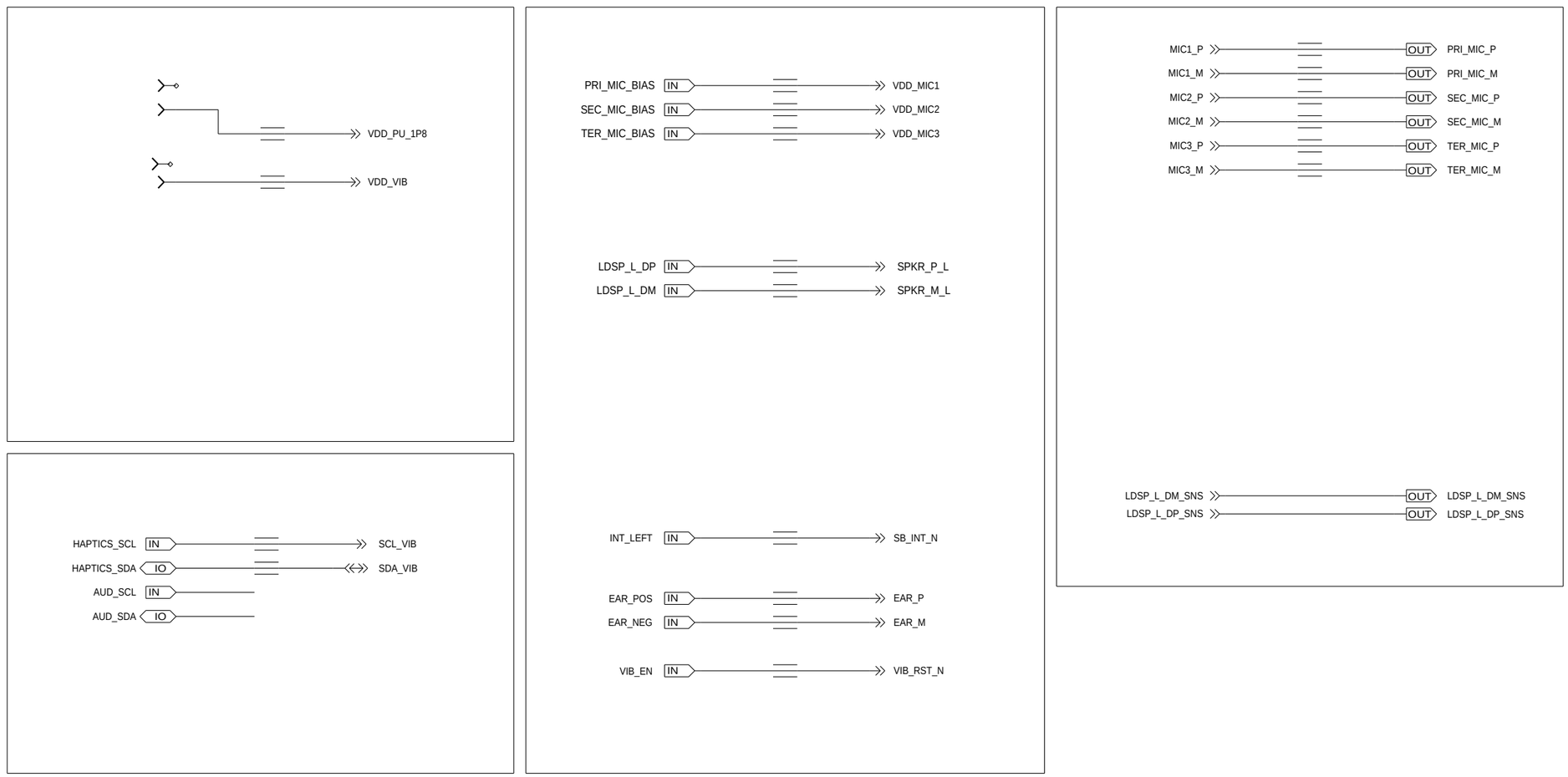

APPROVALS	MOTOROLA MOBILE DEVICES	
ENGINEER:	BLOCK TITLE:	
LAST MODIFIED BY:		
MOTOROLA CONFIDENTIAL RESTRICTED	B PROJECT NAME	REV
THE DRAWING ON THIS PRINT AND INFORMATION THEREWITH ARE PROPRIETARY TO MOTOROLA AND SHALL NOT BE USED OR DISCUSSED IN WHOLE OR IN PART WITHOUT MOTOROLA'S CONSENT.	CAD FILE NAME:	

© COPYRIGHT, MOTOROLA. THIS DOES NOT IMPLY PUBLICATION

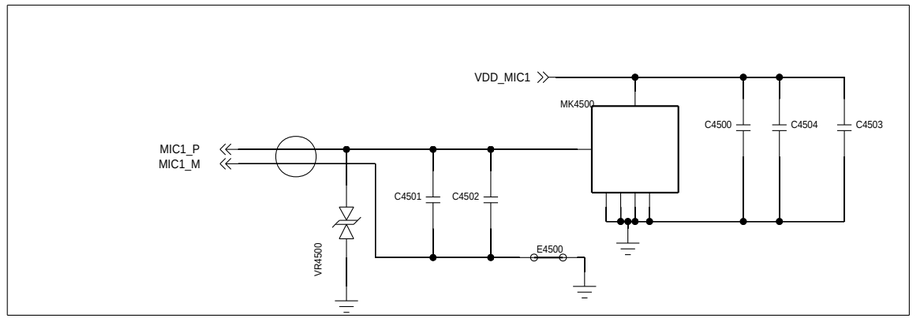

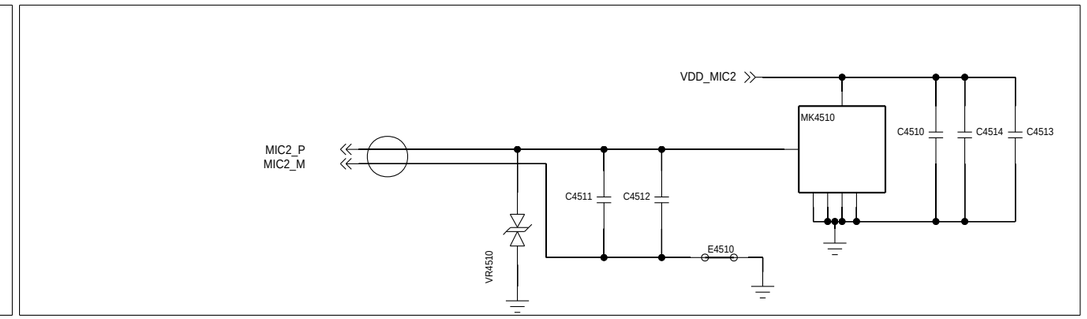

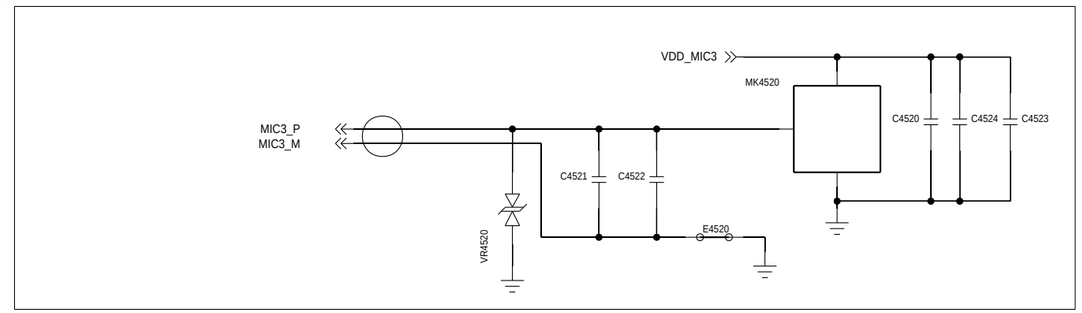

APPROVALS	MOTOROLA MOBILE DEVICES	
ENGINEER:	BLOCK TITLE:	
LAST MODIFIED BY:		
MOTOROLA CONFIDENTIAL RESTRICTED	B PROJECT NAME	REV
THE DRAWING ON THIS PRINT AND INFORMATION THEREWITH ARE PROPRIETARY TO MOTOROLA AND SHALL NOT BE USED OR DISCUSSED IN WHOLE OR IN PART WITHOUT MOTOROLA'S CONSENT.	CAD FILE NAME:	

© COPYRIGHT, MOTOROLA. THIS DOES NOT IMPLY PUBLICATION

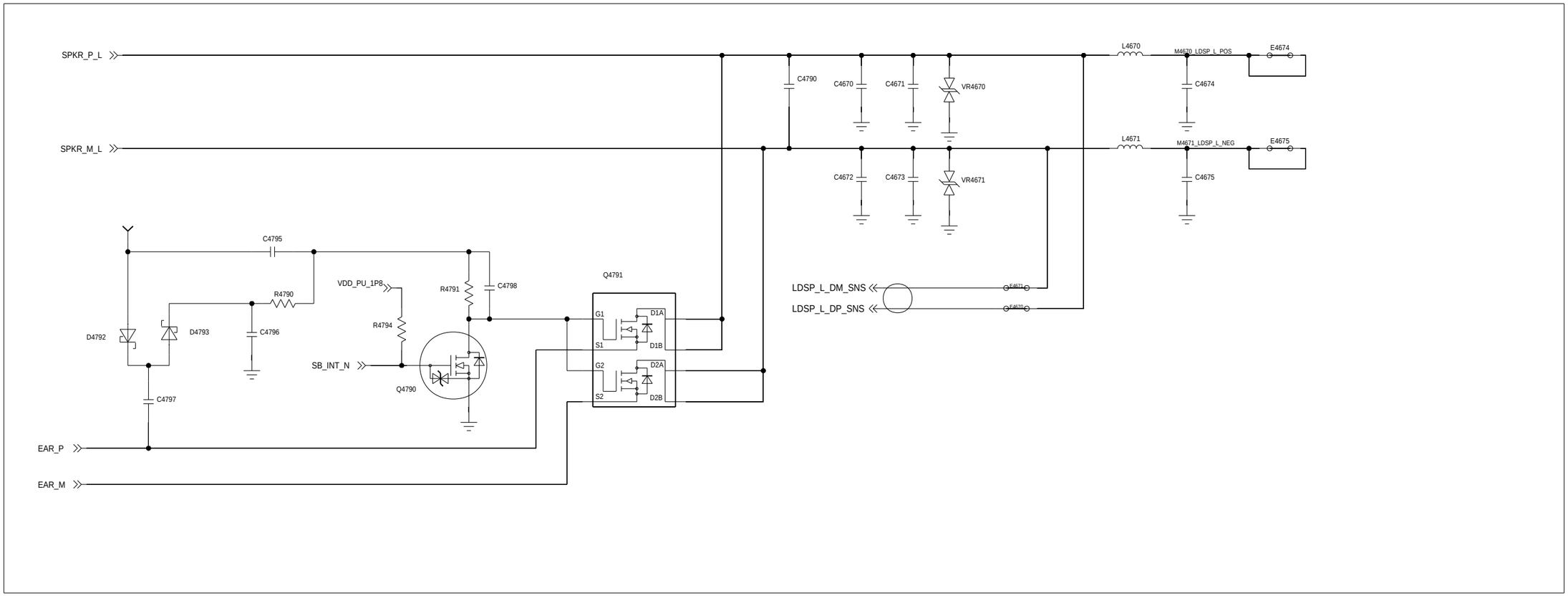

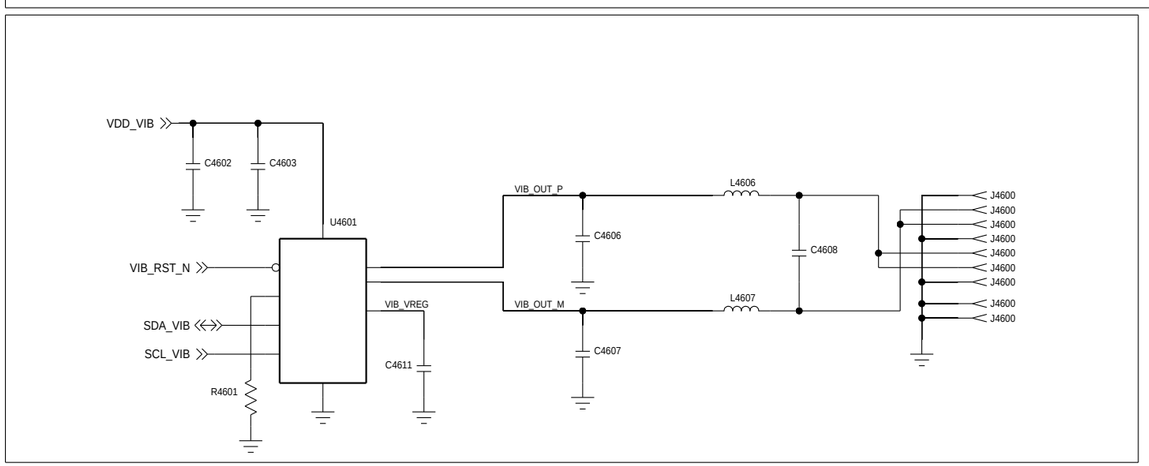

APPROVALS	MOTOROLA MOBILE DEVICES	
ENGINEER:	BLOCK TITLE:	
LAST MODIFIED BY:		
MOTOROLA CONFIDENTIAL RESTRICTED	B PROJECT NAME	REV
THE DRAWING ON THIS PRINT AND INFORMATION THEREWITH ARE PROPRIETARY TO MOTOROLA AND SHALL NOT BE USED OR DISCUSSED IN WHOLE OR IN PART WITHOUT MOTOROLA'S CONSENT.	CAD FILE NAME:	

© COPYRIGHT, MOTOROLA. THIS DOES NOT IMPLY PUBLICATION

APPROVALS	MOTOROLA MOBILE DEVICES
ENGINEER:	BLOCK TITLE:
LAST MODIFIED BY:	

MOTOROLA CONFIDENTIAL RESTRICTED

THE DRAWING ON THIS PRINT AND INFORMATION THEREWITH ARE PROPRIETARY TO MOTOROLA AND SHALL NOT BE USED OR DISCUSSED IN WHOLE OR IN PART WITHOUT MOTOROLA'S CONSENT.
© COPYRIGHT, MOTOROLA. THIS DOES NOT IMPLY PUBLICATION

B	PROJECT NAME	REV
CAD FILE NAME:		

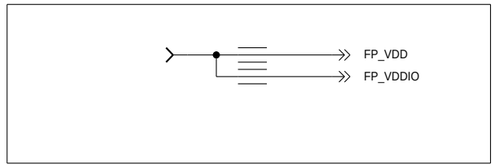

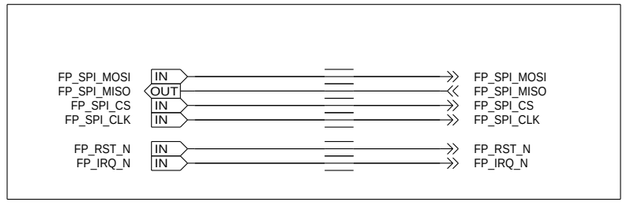

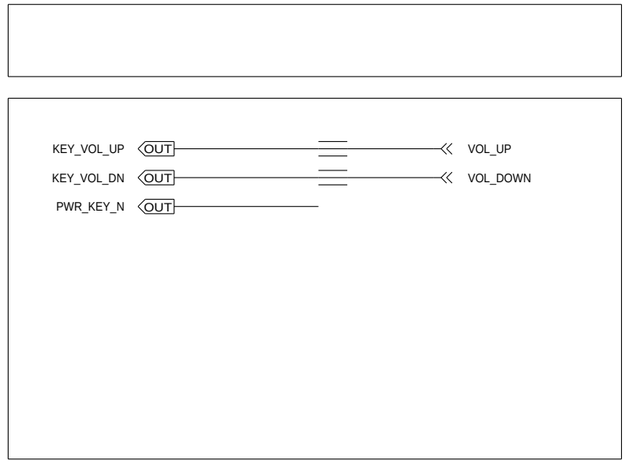

APPROVALS	MOTOROLA MOBILE DEVICES
ENGINEER:	BLOCK TITLE:
LAST MODIFIED BY:	
MOTOROLA CONFIDENTIAL RESTRICTED	B PROJECT NAME / REV
THE DRAWING ON THIS PRINT AND INFORMATION THEREWITH ARE PROPRIETARY TO MOTOROLA AND SHALL NOT BE USED OR DISCUSSED IN WHOLE OR IN PART WITHOUT MOTOROLA'S CONSENT.	CAD FILE NAME:

© COPYRIGHT, MOTOROLA. THIS DOES NOT IMPLY PUBLICATION

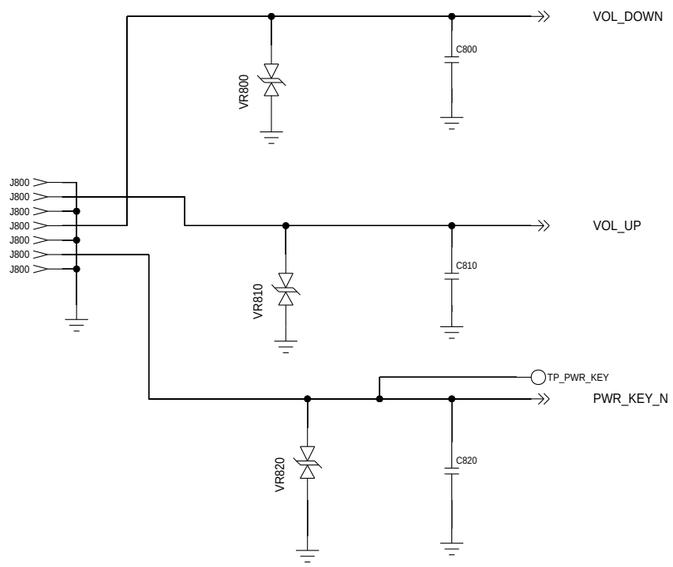

APPROVALS	MOTOROLA MOBILE DEVICES
ENGINEER:	BLOCK TITLE:
LAST MODIFIED BY:	
MOTOROLA CONFIDENTIAL RESTRICTED	B — PROJECT NAME — REV
	CAD FILE NAME:

THE DRAWING ON THIS PRINT AND INFORMATION THEREWITH ARE PROPRIETARY TO MOTOROLA AND SHALL NOT BE USED OR DISCUSSED IN WHOLE OR IN PART WITHOUT MOTOROLA'S CONSENT.
© COPYRIGHT, MOTOROLA. THIS DOES NOT IMPLY PUBLICATION

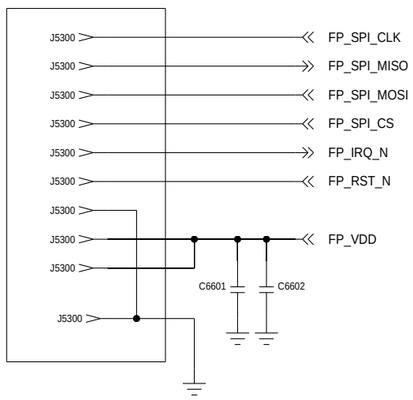

APPROVALS	MOTOROLA MOBILE DEVICES
ENGINEER:	BLOCK TITLE:
LAST MODIFIED BY:	
MOTOROLA CONFIDENTIAL RESTRICTED	B PROJECT NAME / REV
	CAD FILE NAME:

THE DRAWING ON THIS PRINT AND INFORMATION THEREWITH ARE PROPRIETARY TO MOTOROLA AND SHALL NOT BE USED OR DISCUSSED IN WHOLE OR IN PART WITHOUT MOTOROLA'S CONSENT.
© COPYRIGHT, MOTOROLA. THIS DOES NOT IMPLY PUBLICATION

APPROVALS	MOTOROLA MOBILE DEVICES
ENGINEER:	BLOCK TITLE:
LAST MODIFIED BY:	
MOTOROLA CONFIDENTIAL RESTRICTED	B PROJECT NAME / REV
	CAD FILE NAME:

THE DRAWING ON THIS PRINT AND INFORMATION THEREWITH ARE PROPRIETARY TO MOTOROLA AND SHALL NOT BE USED OR DISCUSSED IN WHOLE OR IN PART WITHOUT MOTOROLA'S CONSENT.
© COPYRIGHT, MOTOROLA. THIS DOES NOT IMPLY PUBLICATION

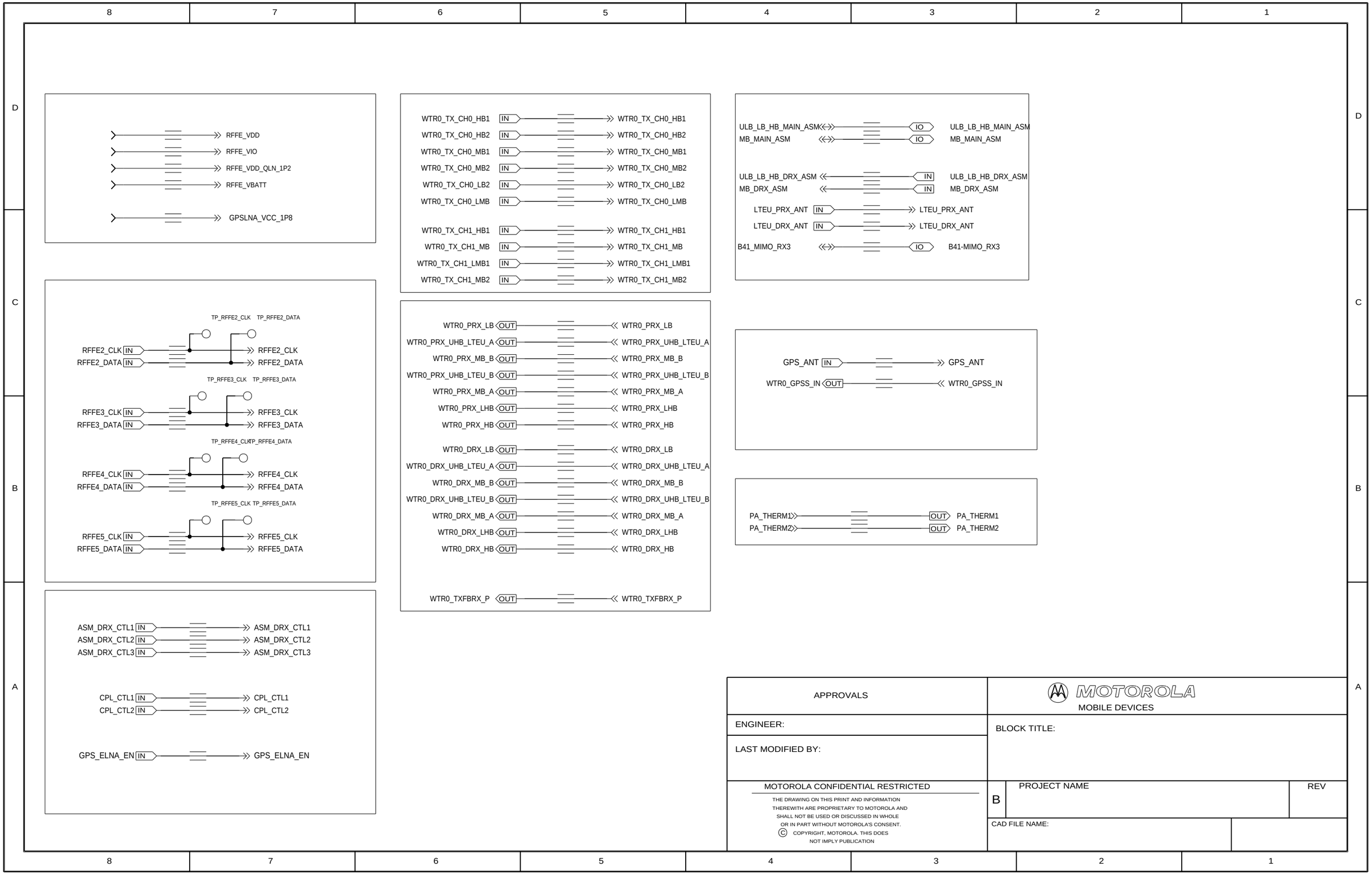
RFFE_VDD
RFFE_VIO
RFFE_VDD_QLN_1P2
RFFE_VBATT
GPSLNA_VCC_1P8
TP_RFFE2_CLK TP_RFFE2_DATA
RFFE2_CLK IN
RFFE2_DATA IN
RFFE2_CLK
RFFE2_DATA
TP_RFFE3_CLK TP_RFFE3_DATA
RFFE3_CLK IN
RFFE3_DATA IN
RFFE3_CLK
RFFE3_DATA
TP_RFFE4_CLK TP_RFFE4_DATA
RFFE4_CLK IN
RFFE4_DATA IN
RFFE4_CLK
RFFE4_DATA
TP_RFFE5_CLK TP_RFFE5_DATA
RFFE5_CLK IN
RFFE5_DATA IN
RFFE5_CLK
RFFE5_DATA
ASM_DRX_CTL1 IN
ASM_DRX_CTL2 IN
ASM_DRX_CTL3 IN
ASM_DRX_CTL1
ASM_DRX_CTL2
ASM_DRX_CTL3
CPL_CTL1 IN
CPL_CTL2 IN
CPL_CTL1
CPL_CTL2
GPS_ELNA_EN IN
GPS_ELNA_EN
WTR0_TX_CH0_HB1 IN
WTR0_TX_CH0_HB2 IN
WTR0_TX_CH0_MB1 IN
WTR0_TX_CH0_MB2 IN
WTR0_TX_CH0_LB2 IN
WTR0_TX_CH0_LMB IN
WTR0_TX_CH1_HB1 IN
WTR0_TX_CH1_MB IN
WTR0_TX_CH1_LMB1 IN
WTR0_TX_CH1_MB2 IN
WTR0_TX_CH0_HB1
WTR0_TX_CH0_HB2
WTR0_TX_CH0_MB1
WTR0_TX_CH0_MB2
WTR0_TX_CH0_LB2
WTR0_TX_CH0_LMB
WTR0_TX_CH1_HB1
WTR0_TX_CH1_MB
WTR0_TX_CH1_LMB1
WTR0_TX_CH1_MB2
WTR0_PRX_LB OUT
WTR0_PRX_UHB_LTEU_A OUT
WTR0_PRX_MB_B OUT
WTR0_PRX_UHB_LTEU_B OUT
WTR0_PRX_MB_A OUT
WTR0_PRX_LHB OUT
WTR0_PRX_HB OUT
WTR0_DRX_LB OUT
WTR0_DRX_UHB_LTEU_A OUT
WTR0_DRX_MB_B OUT
WTR0_DRX_UHB_LTEU_B OUT
WTR0_DRX_MB_A OUT
WTR0_DRX_LHB OUT
WTR0_DRX_HB OUT
WTR0_TXFBRX_P OUT
WTR0_PRX_LB
WTR0_PRX_UHB_LTEU_A
WTR0_PRX_MB_B
WTR0_PRX_UHB_LTEU_B
WTR0_PRX_MB_A
WTR0_PRX_LHB
WTR0_PRX_HB
WTR0_DRX_LB
WTR0_DRX_UHB_LTEU_A
WTR0_DRX_MB_B
WTR0_DRX_UHB_LTEU_B
WTR0_DRX_MB_A
WTR0_DRX_LHB
WTR0_DRX_HB
WTR0_TXFBRX_P
ULB_LB_HB_MAIN_ASM IO
MB_MAIN_ASM IO
ULB_LB_HB_MAIN_ASM
MB_MAIN_ASM
ULB_LB_HB_DRX_ASM IN
MB_DRX_ASM IN
ULB_LB_HB_DRX_ASM
MB_DRX_ASM
LTEU_PRX_ANT IN
LTEU_DRX_ANT IN
LTEU_PRX_ANT
LTEU_DRX_ANT
B41_MIMO_RX3 IO
B41-MIMO_RX3
GPS_ANT IN
WTR0_GPSS_IN OUT
GPS_ANT
WTR0_GPSS_IN
PA_THERM1 OUT
PA_THERM2 OUT
PA_THERM1
PA_THERM2
APPROVALS
MOTOROLA
MOBILE DEVICES
ENGINEER:
LAST MODIFIED BY:
BLOCK TITLE:
MOTOROLA CONFIDENTIAL RESTRICTED
THE DRAWING ON THIS PRINT AND INFORMATION THEREWITH ARE PROPRIETARY TO MOTOROLA AND SHALL NOT BE USED OR DISCUSSED IN WHOLE OR IN PART WITHOUT MOTOROLA'S CONSENT.
© COPYRIGHT, MOTOROLA. THIS DOES NOT IMPLY PUBLICATION
B
PROJECT NAME
REV
CAD FILE NAME:

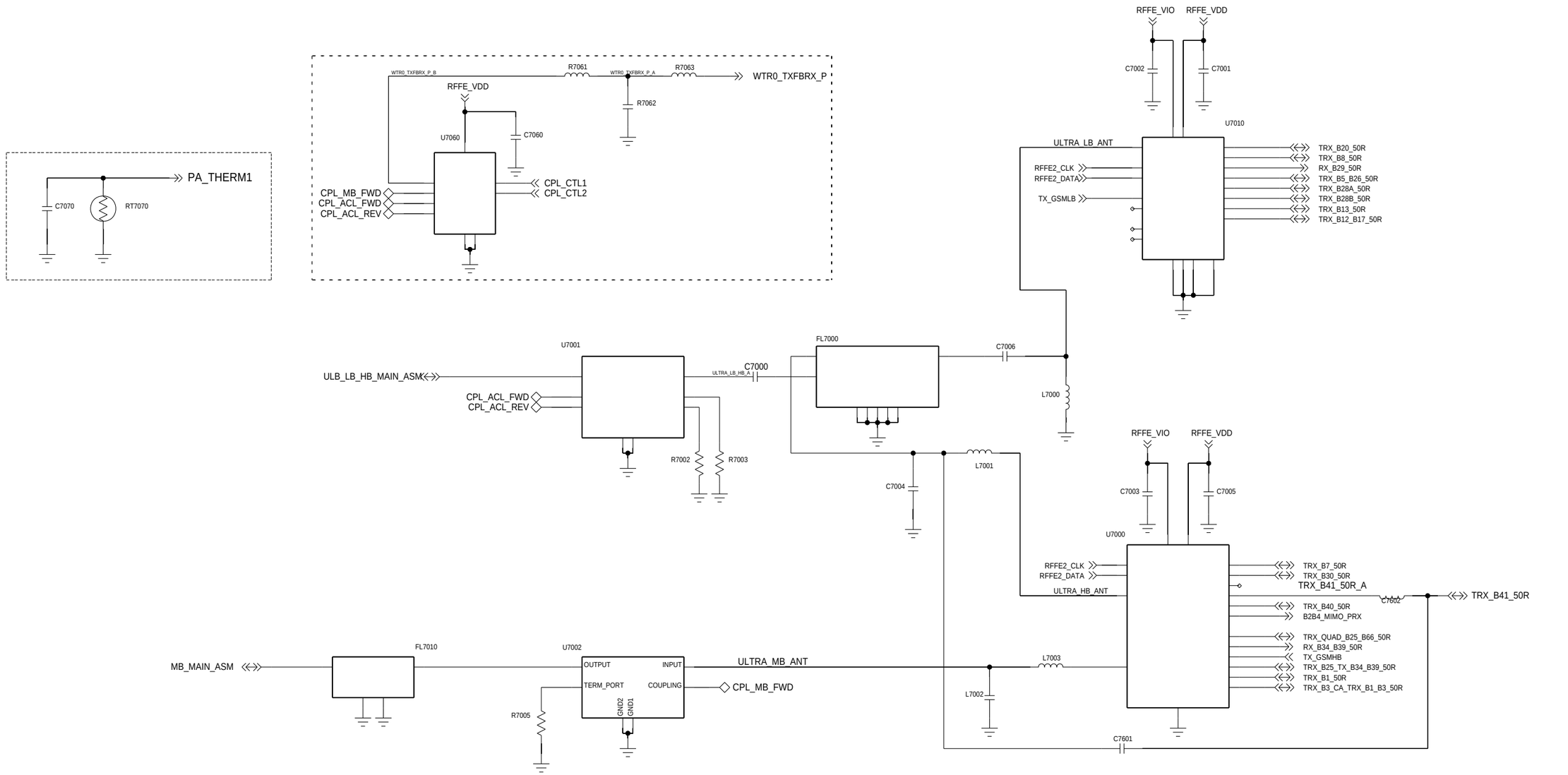

APPROVALS	MOTOROLA MOBILE DEVICES
ENGINEER:	BLOCK TITLE:
LAST MODIFIED BY:	
MOTOROLA CONFIDENTIAL RESTRICTED	B — PROJECT NAME — REV
THE DRAWING ON THIS PRINT AND INFORMATION THEREWITH ARE PROPRIETARY TO MOTOROLA AND SHALL NOT BE USED OR DISCUSSED IN WHOLE OR IN PART WITHOUT MOTOROLA'S CONSENT.	CAD FILE NAME:

© COPYRIGHT, MOTOROLA. THIS DOES NOT IMPLY PUBLICATION

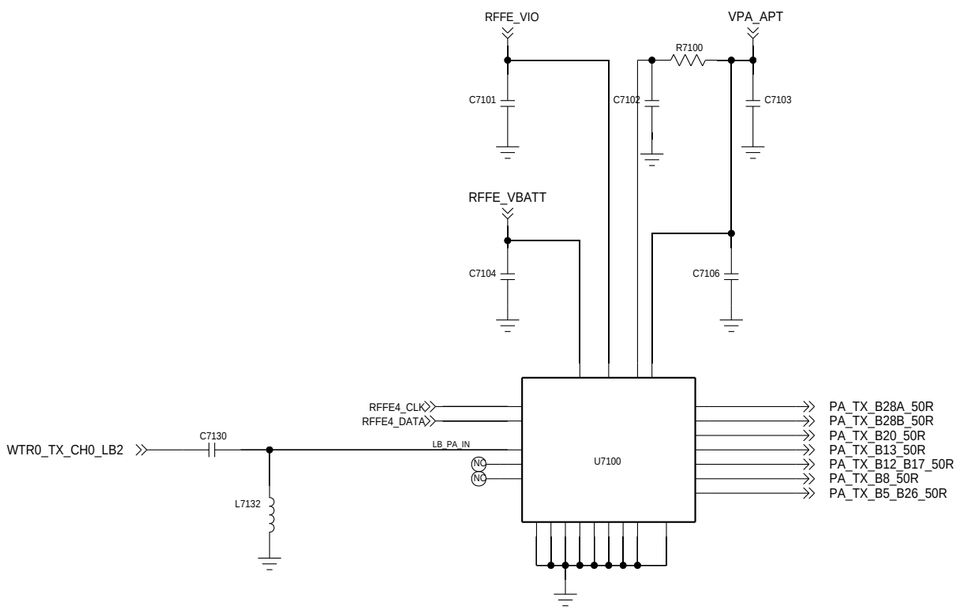

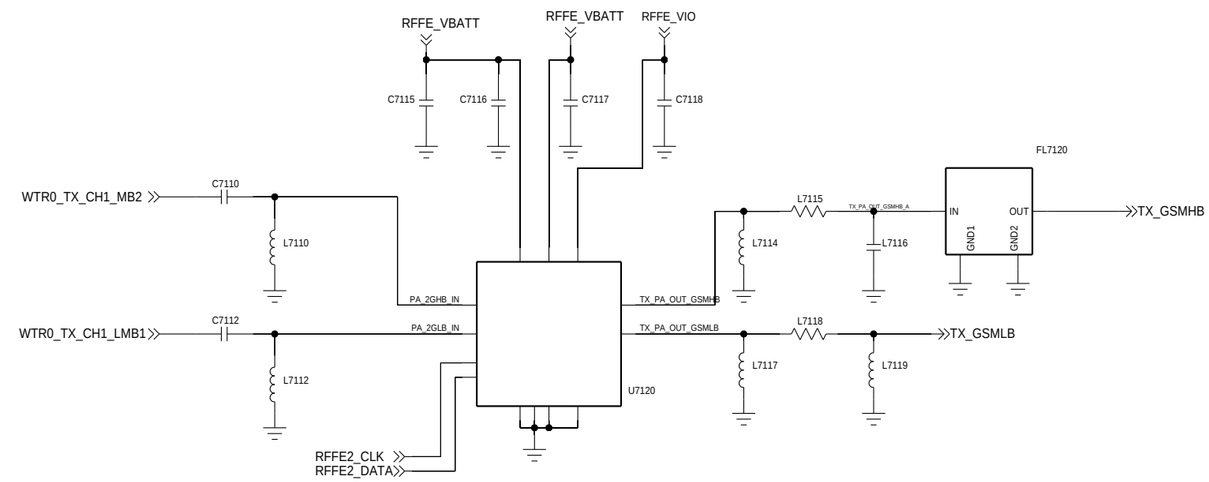

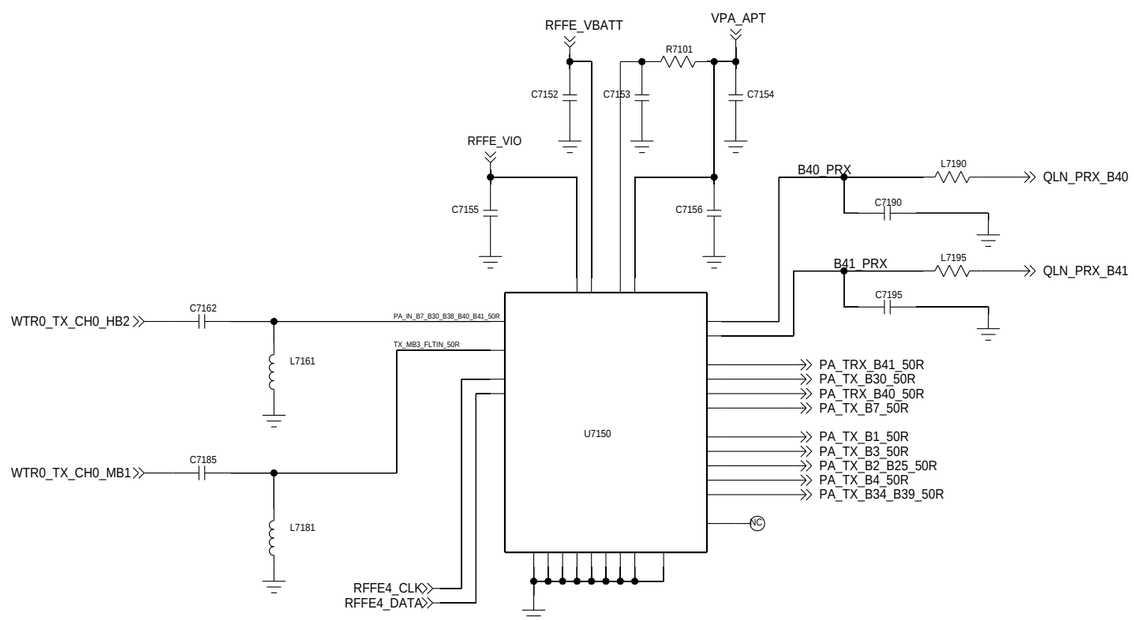

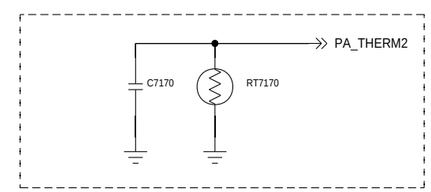

APPROVALS	MOTOROLA MOBILE DEVICES	
ENGINEER:	BLOCK TITLE:	
LAST MODIFIED BY:		
MOTOROLA CONFIDENTIAL RESTRICTED THE DRAWING ON THIS PRINT AND INFORMATION THEREWITH ARE PROPRIETARY TO MOTOROLA AND SHALL NOT BE USED OR DISCUSSED IN WHOLE OR IN PART WITHOUT MOTOROLA'S CONSENT. © COPYRIGHT, MOTOROLA. THIS DOES NOT IMPLY PUBLICATION	B PROJECT NAME	REV
	CAD FILE NAME:	

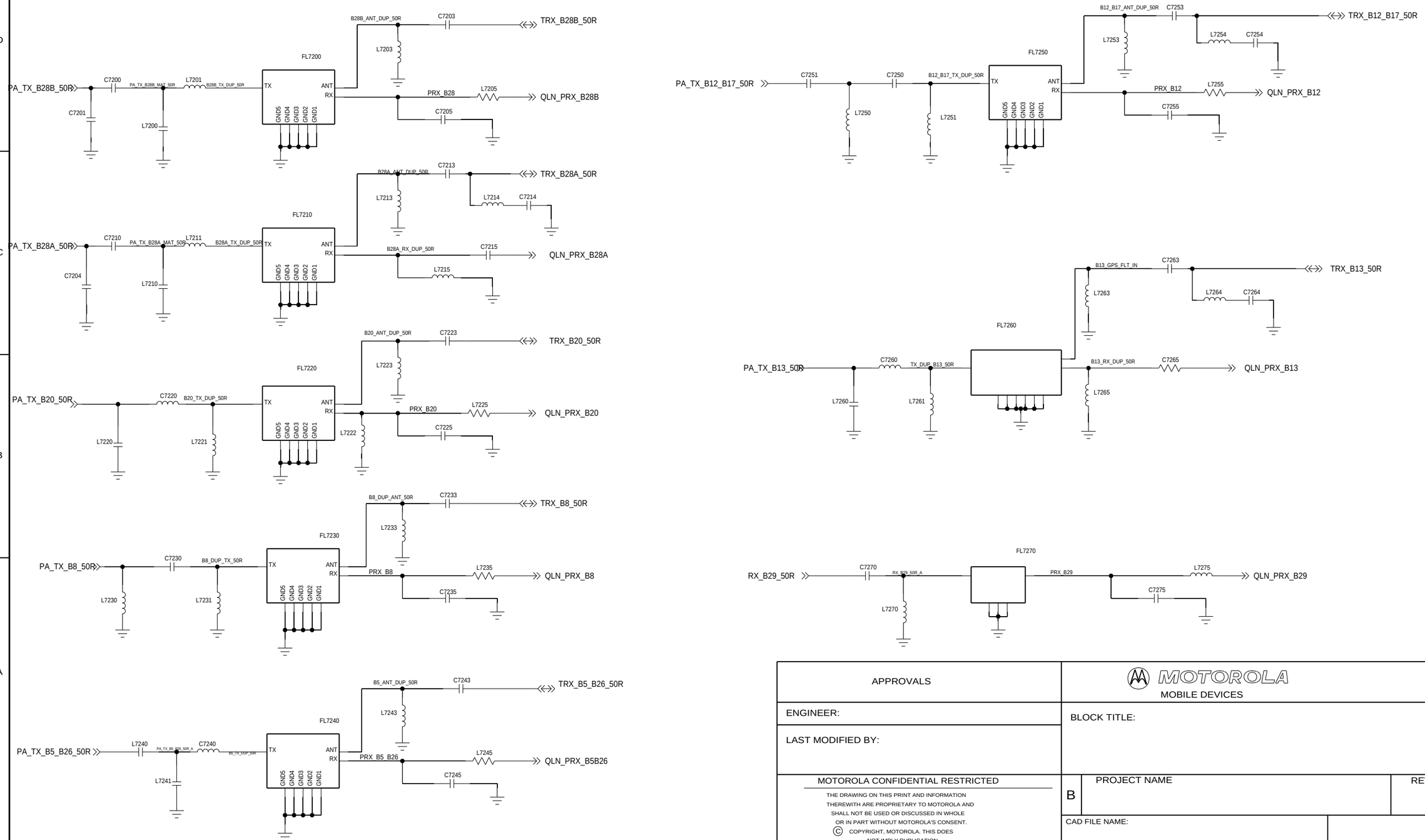

APPROVALS	MOTOROLA MOBILE DEVICES	
ENGINEER:	BLOCK TITLE:	
LAST MODIFIED BY:		
MOTOROLA CONFIDENTIAL RESTRICTED	B	PROJECT NAME / REV
THE DRAWING ON THIS PRINT AND INFORMATION THEREWITH ARE PROPRIETARY TO MOTOROLA AND SHALL NOT BE USED OR DISCUSSED IN WHOLE OR IN PART WITHOUT MOTOROLA'S CONSENT.	CAD FILE NAME:	

© COPYRIGHT, MOTOROLA. THIS DOES NOT IMPLY PUBLICATION

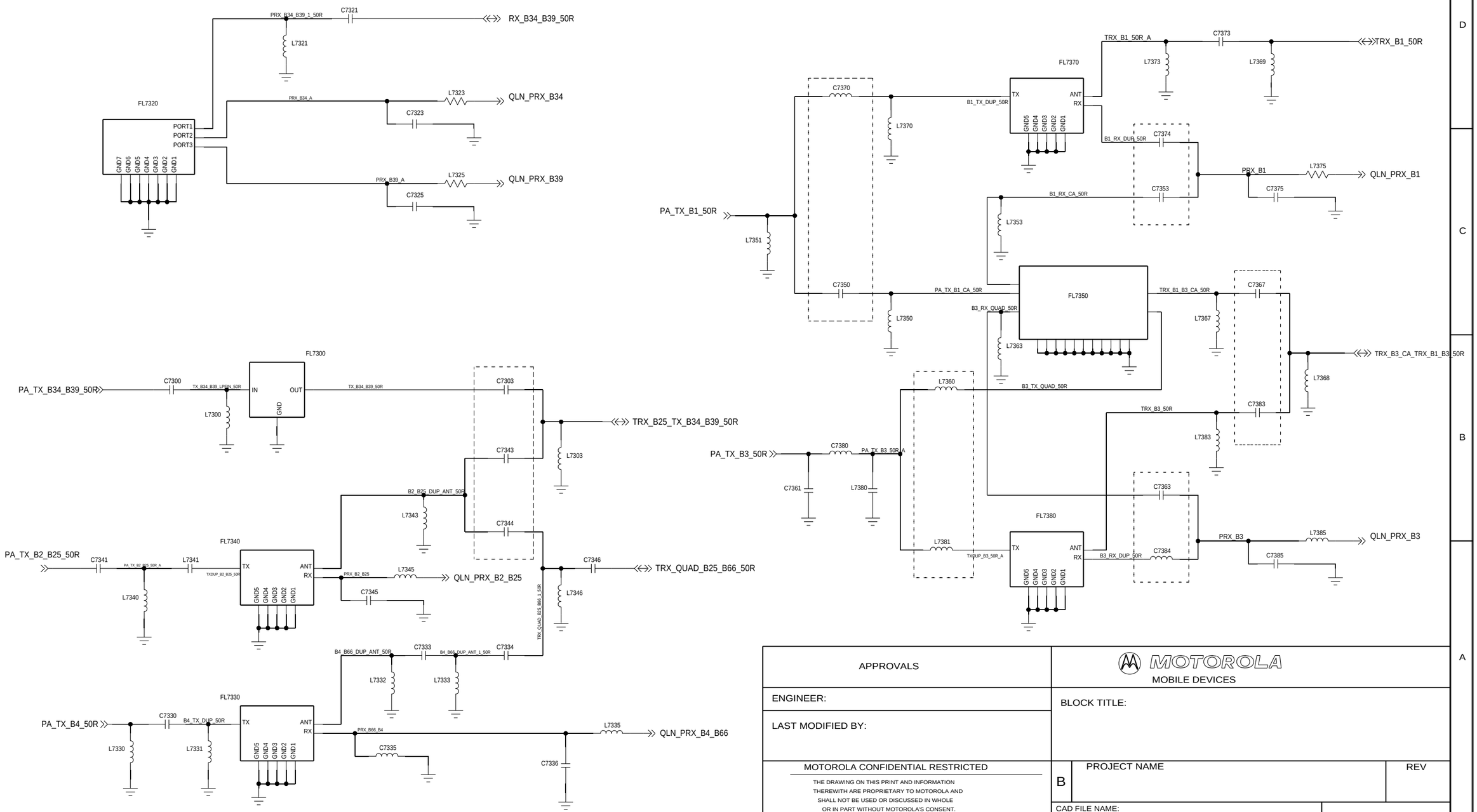

APPROVALS	MOTOROLA MOBILE DEVICES	
ENGINEER:	BLOCK TITLE:	
LAST MODIFIED BY:		
MOTOROLA CONFIDENTIAL RESTRICTED	B	PROJECT NAME / REV
THE DRAWING ON THIS PRINT AND INFORMATION THEREWITH ARE PROPRIETARY TO MOTOROLA AND SHALL NOT BE USED OR DISCUSSED IN WHOLE OR IN PART WITHOUT MOTOROLA'S CONSENT.	CAD FILE NAME:	

© COPYRIGHT, MOTOROLA. THIS DOES NOT IMPLY PUBLICATION

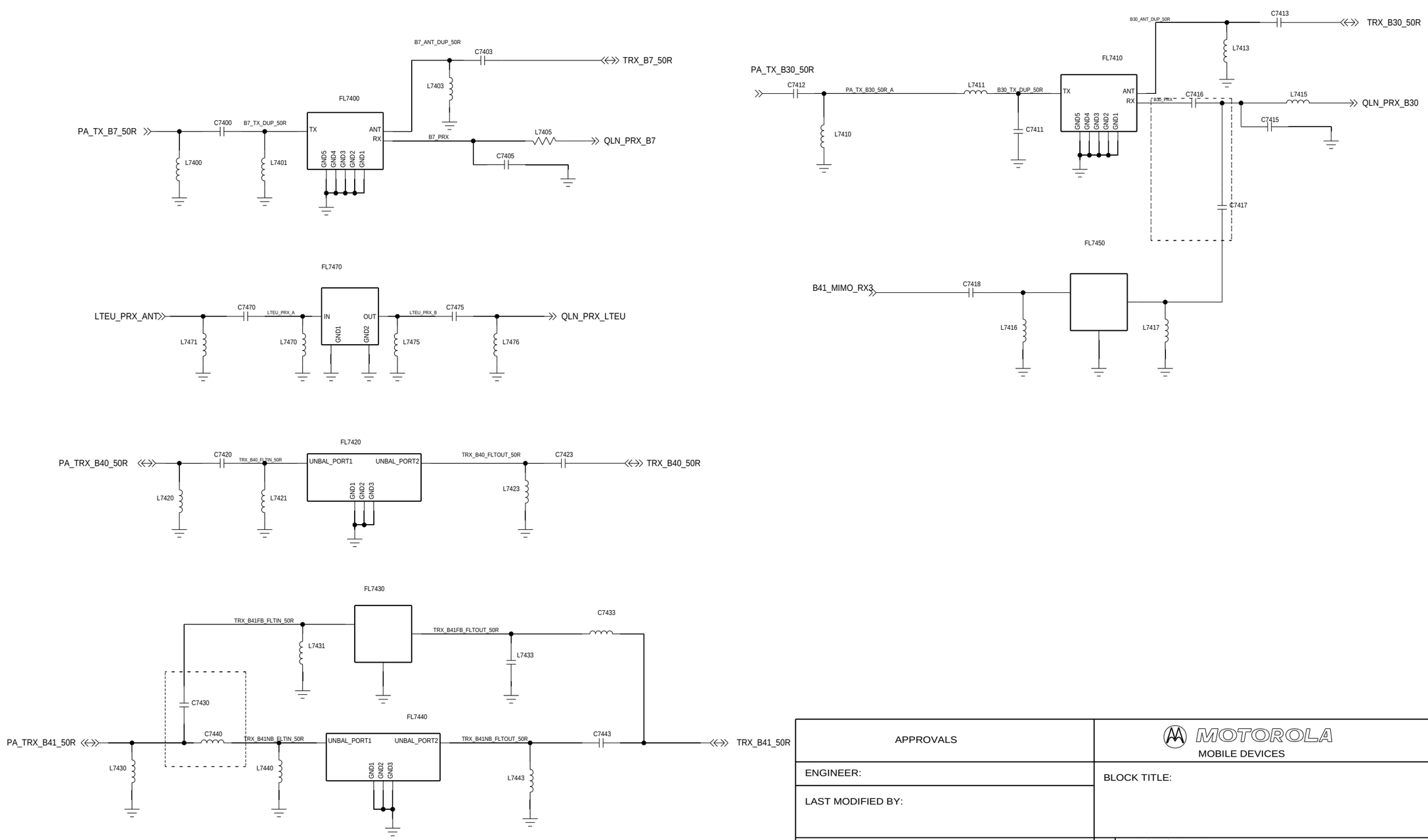

APPROVALS	MOTOROLA MOBILE DEVICES
ENGINEER:	BLOCK TITLE:
LAST MODIFIED BY:	
MOTOROLA CONFIDENTIAL RESTRICTED	B — PROJECT NAME — REV
THE DRAWING ON THIS PRINT AND INFORMATION THEREWITH ARE PROPRIETARY TO MOTOROLA AND SHALL NOT BE USED OR DISCUSSED IN WHOLE OR IN PART WITHOUT MOTOROLA'S CONSENT.	CAD FILE NAME:

© COPYRIGHT, MOTOROLA. THIS DOES NOT IMPLY PUBLICATION

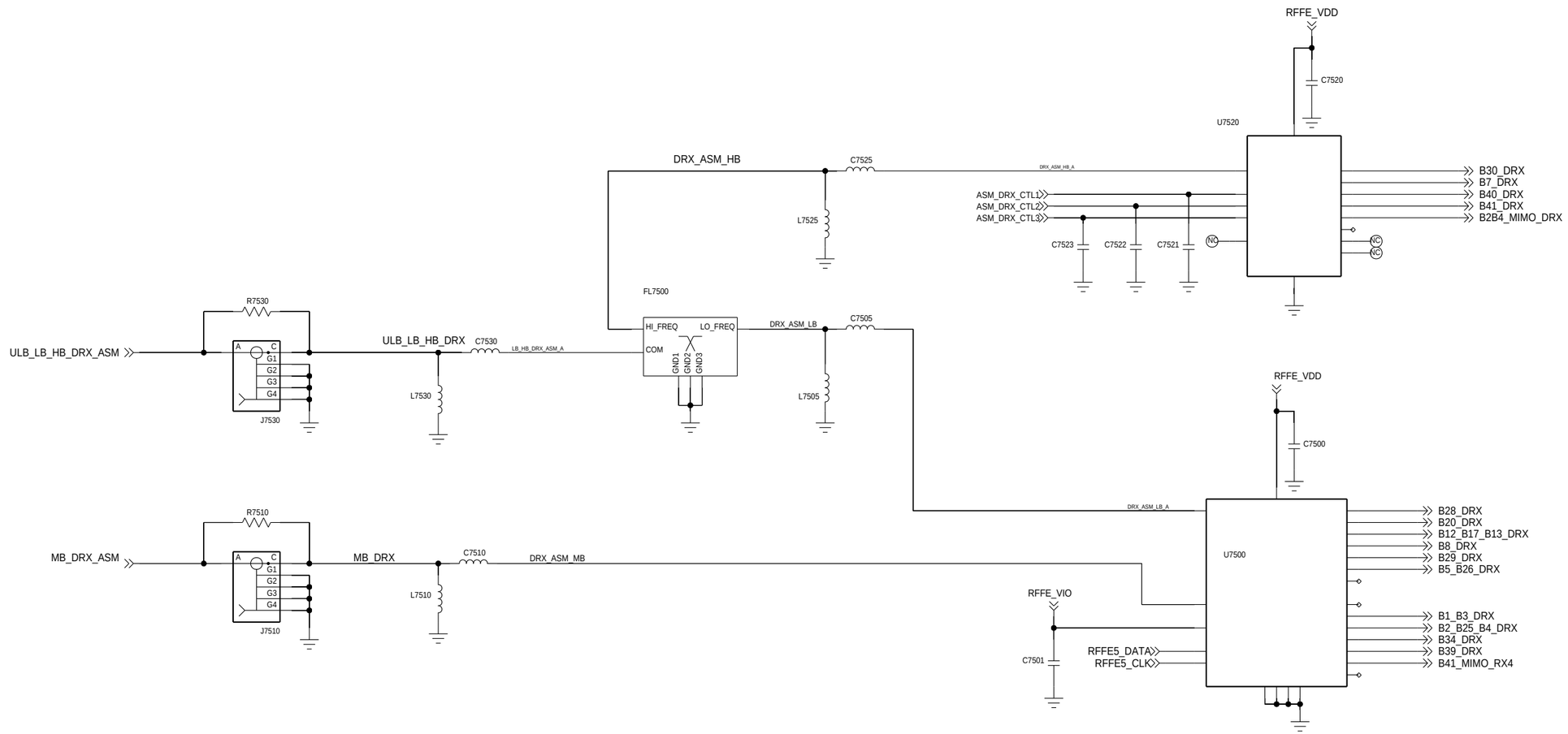

APPROVALS	MOTOROLA MOBILE DEVICES
ENGINEER:	BLOCK TITLE:
LAST MODIFIED BY:	
MOTOROLA CONFIDENTIAL RESTRICTED	B — PROJECT NAME — REV
THE DRAWING ON THIS PRINT AND INFORMATION THEREWITH ARE PROPRIETARY TO MOTOROLA AND SHALL NOT BE USED OR DISCUSSED IN WHOLE OR IN PART WITHOUT MOTOROLA'S CONSENT.	CAD FILE NAME:

© COPYRIGHT, MOTOROLA. THIS DOES NOT IMPLY PUBLICATION

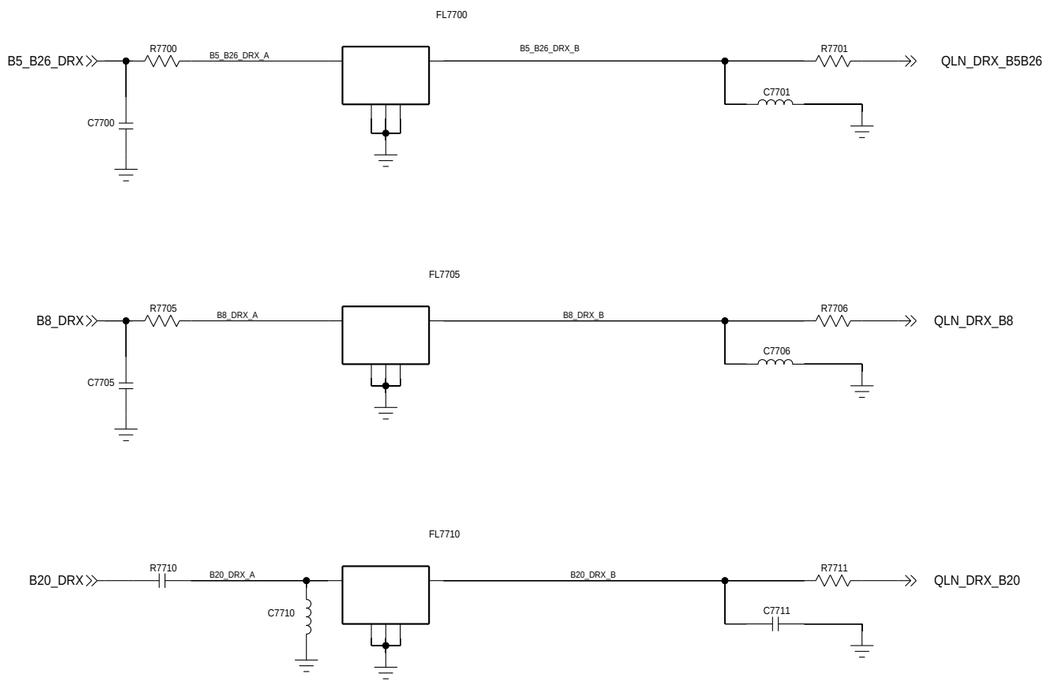

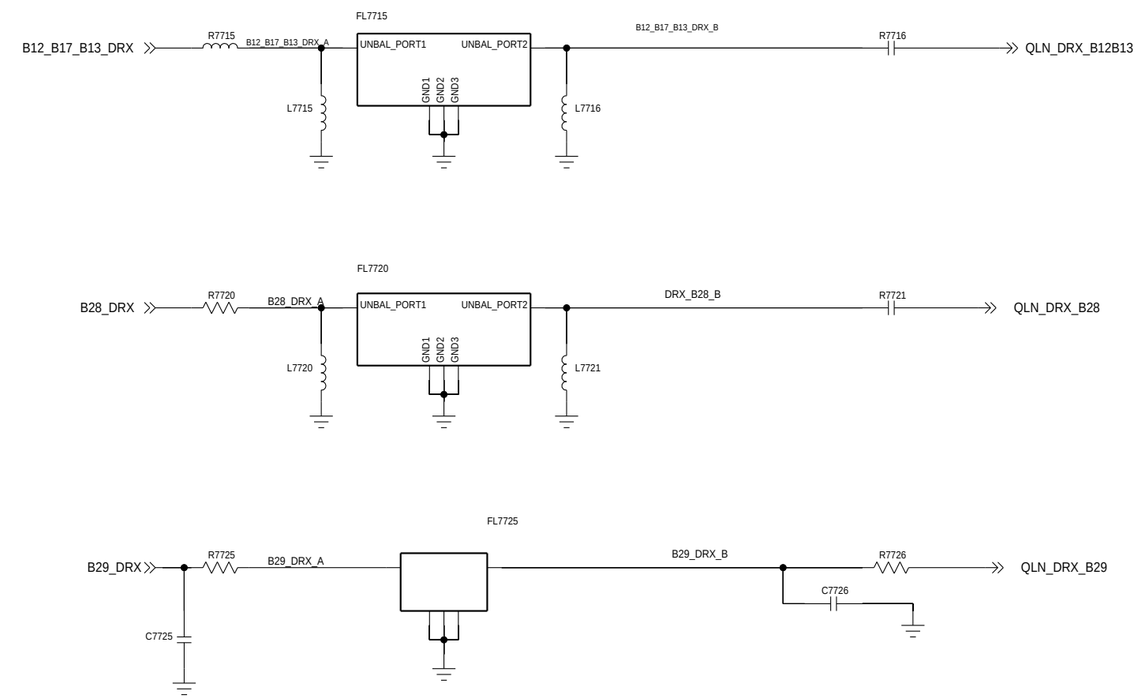

APPROVALS	MOTOROLA MOBILE DEVICES
ENGINEER:	BLOCK TITLE:
LAST MODIFIED BY:	
MOTOROLA CONFIDENTIAL RESTRICTED	B — PROJECT NAME — REV
THE DRAWING ON THIS PRINT AND INFORMATION THEREWITH ARE PROPRIETARY TO MOTOROLA AND SHALL NOT BE USED OR DISCUSSED IN WHOLE OR IN PART WITHOUT MOTOROLA'S CONSENT.	CAD FILE NAME:

© COPYRIGHT, MOTOROLA. THIS DOES NOT IMPLY PUBLICATION

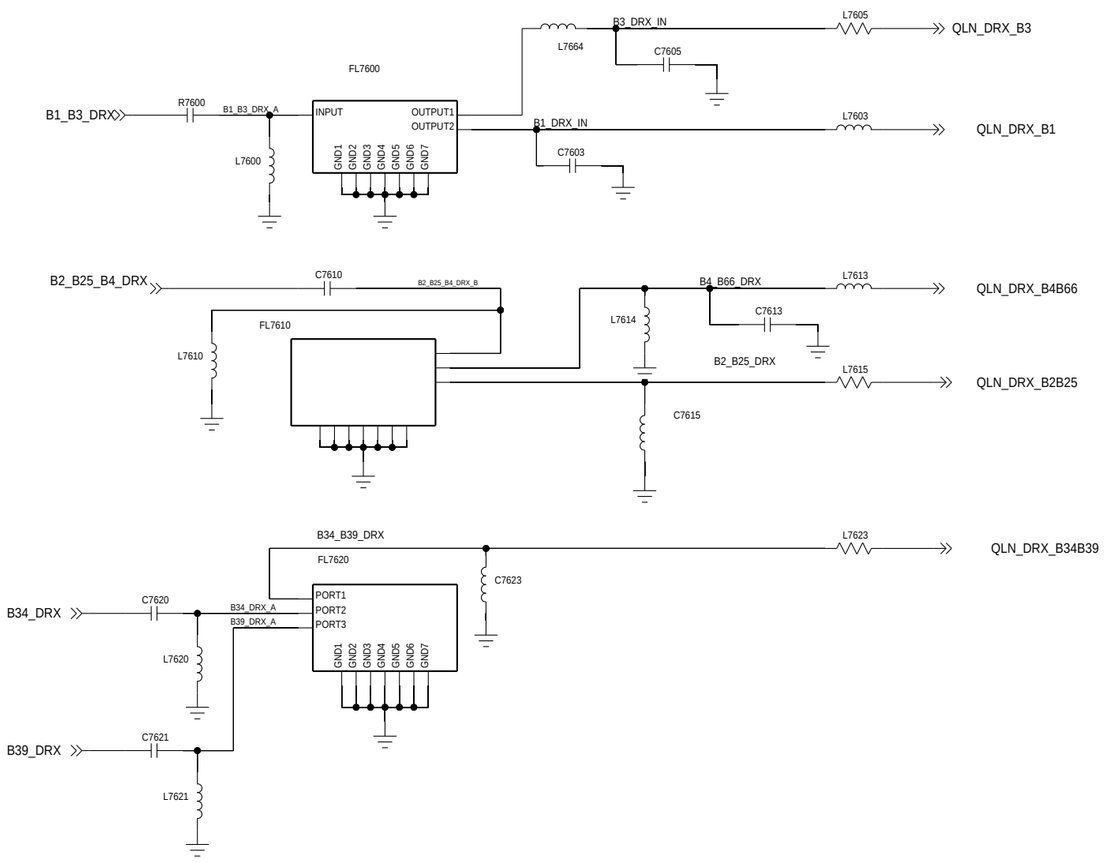

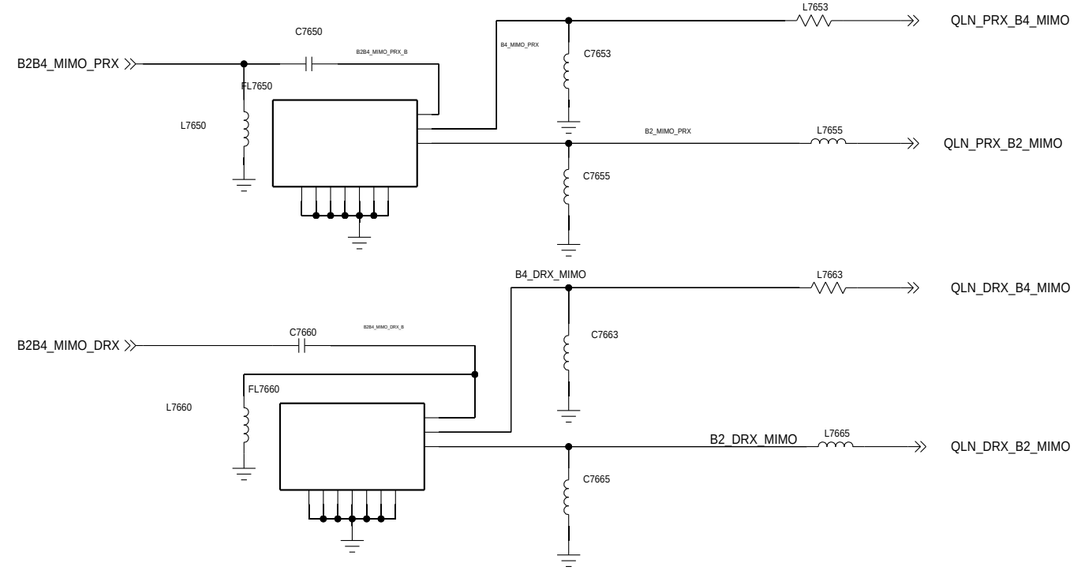

APPROVALS	MOTOROLA MOBILE DEVICES	
ENGINEER:	BLOCK TITLE:	
LAST MODIFIED BY:		
MOTOROLA CONFIDENTIAL RESTRICTED	B PROJECT NAME	REV
THE DRAWING ON THIS PRINT AND INFORMATION THEREWITH ARE PROPRIETARY TO MOTOROLA AND SHALL NOT BE USED OR DISCUSSED IN WHOLE OR IN PART WITHOUT MOTOROLA'S CONSENT.	CAD FILE NAME:	

© COPYRIGHT, MOTOROLA. THIS DOES NOT IMPLY PUBLICATION

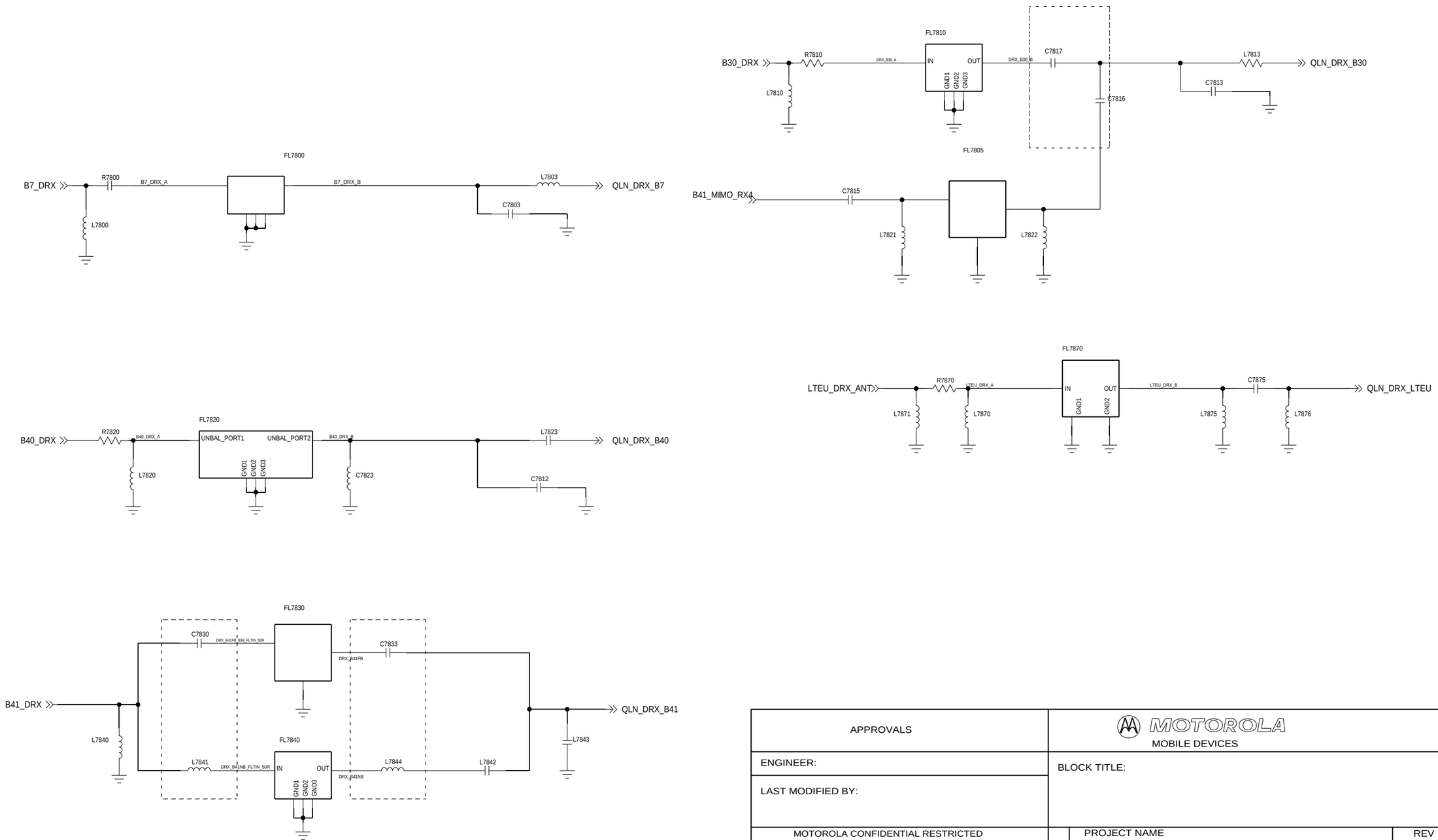

APPROVALS	MOTOROLA MOBILE DEVICES
ENGINEER:	BLOCK TITLE:
LAST MODIFIED BY:	

MOTOROLA CONFIDENTIAL RESTRICTED

THE DRAWING ON THIS PRINT AND INFORMATION THEREWITH ARE PROPRIETARY TO MOTOROLA AND SHALL NOT BE USED OR DISCUSSED IN WHOLE OR IN PART WITHOUT MOTOROLA'S CONSENT.
© COPYRIGHT, MOTOROLA. THIS DOES NOT IMPLY PUBLICATION

B	PROJECT NAME	REV
CAD FILE NAME:		

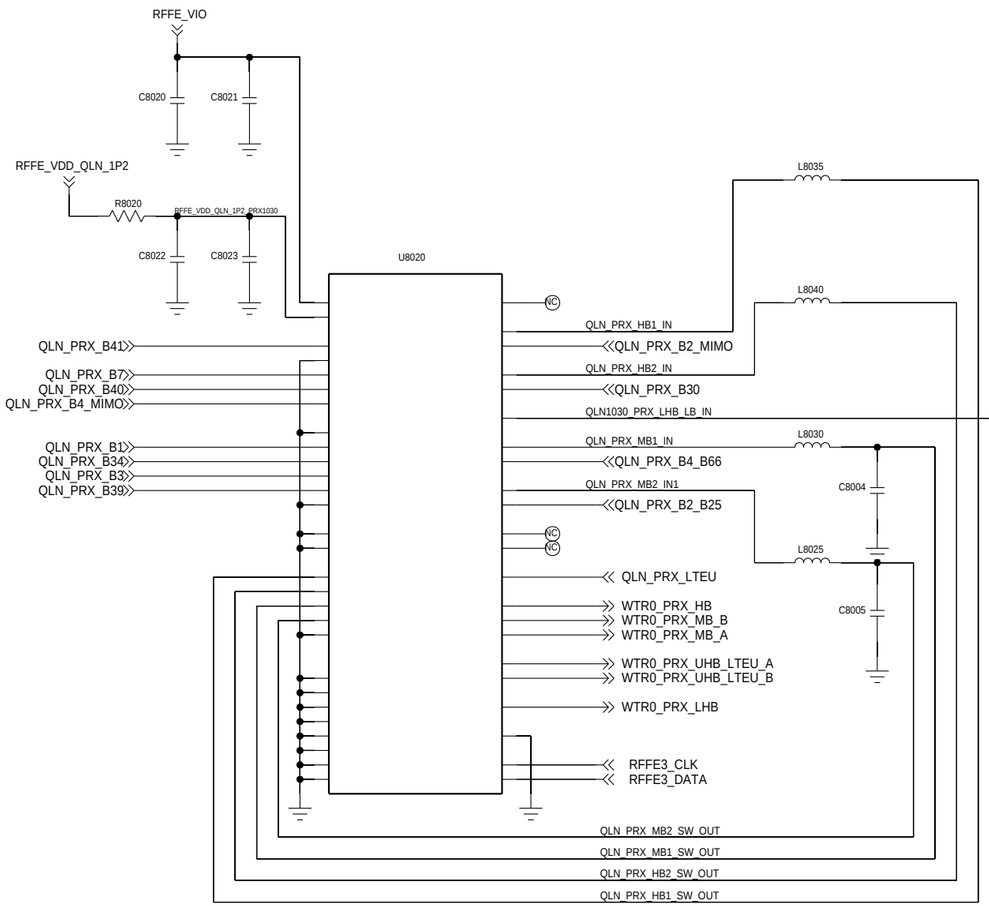

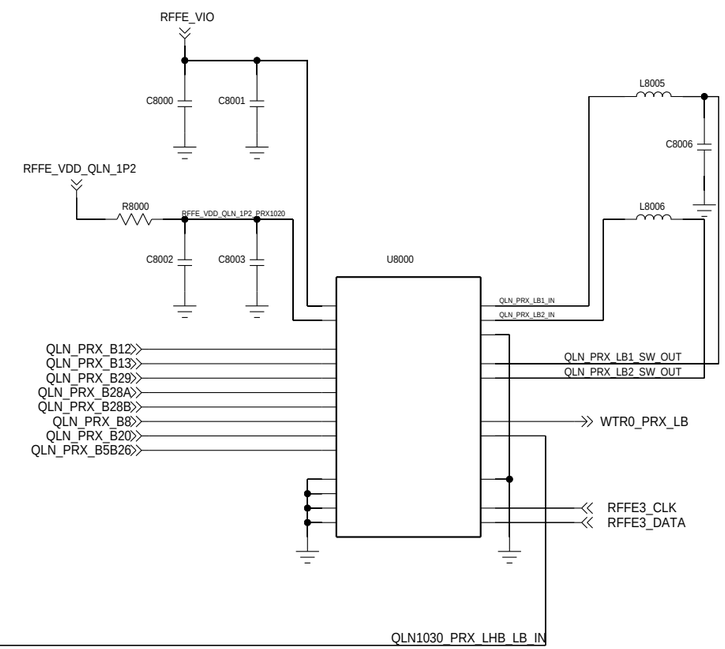

APPROVALS	MOTOROLA MOBILE DEVICES	
ENGINEER:	BLOCK TITLE:	
LAST MODIFIED BY:		
MOTOROLA CONFIDENTIAL RESTRICTED	B PROJECT NAME	REV
THE DRAWING ON THIS PRINT AND INFORMATION THEREWITH ARE PROPRIETARY TO MOTOROLA AND SHALL NOT BE USED OR DISCUSSED IN WHOLE OR IN PART WITHOUT MOTOROLA'S CONSENT.	CAD FILE NAME:	

© COPYRIGHT, MOTOROLA. THIS DOES NOT IMPLY PUBLICATION

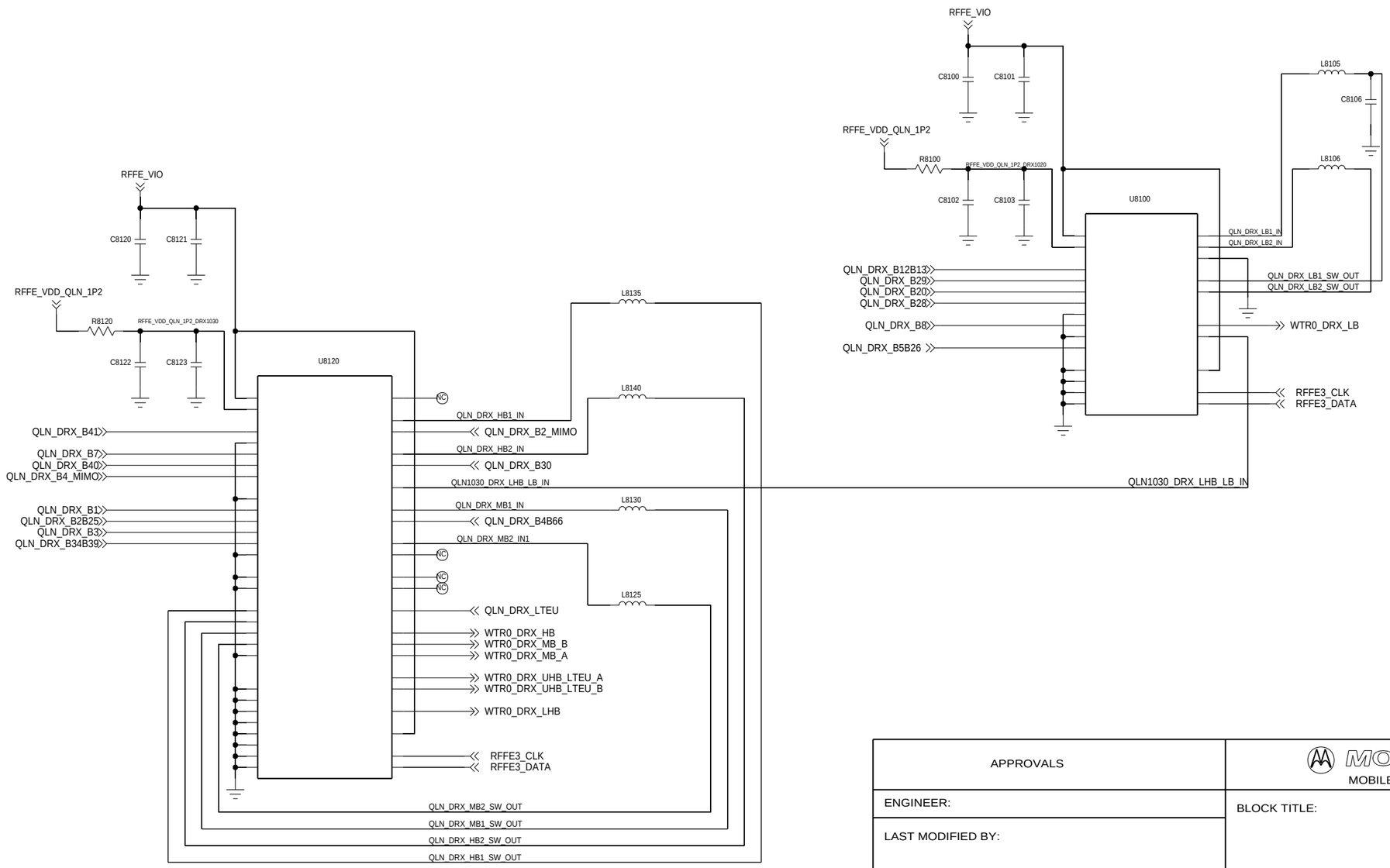

APPROVALS	MOTOROLA MOBILE DEVICES	
ENGINEER:	BLOCK TITLE:	
LAST MODIFIED BY:		
MOTOROLA CONFIDENTIAL RESTRICTED	B PROJECT NAME	REV
THE DRAWING ON THIS PRINT AND INFORMATION THEREWITH ARE PROPRIETARY TO MOTOROLA AND SHALL NOT BE USED OR DISCUSSED IN WHOLE OR IN PART WITHOUT MOTOROLA'S CONSENT.	CAD FILE NAME:	

© COPYRIGHT, MOTOROLA. THIS DOES NOT IMPLY PUBLICATION

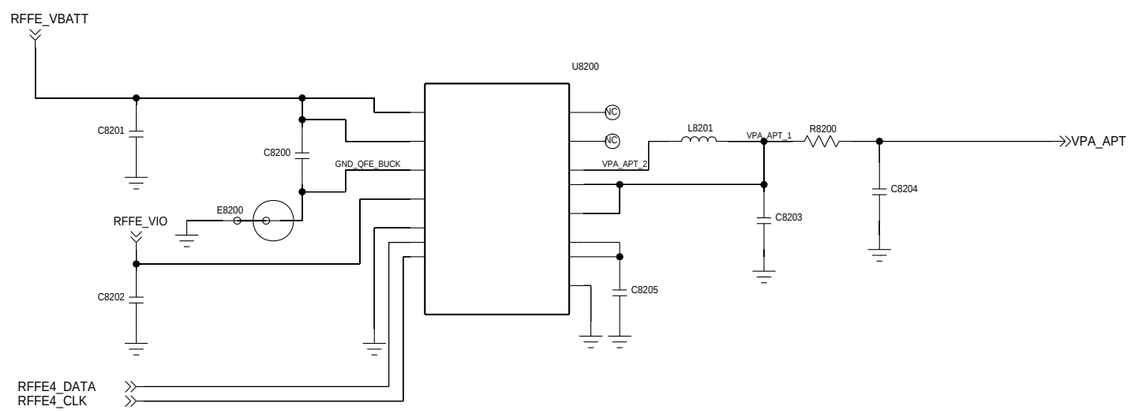

APPROVALS	MOTOROLA MOBILE DEVICES
ENGINEER:	BLOCK TITLE:
LAST MODIFIED BY:	
MOTOROLA CONFIDENTIAL RESTRICTED THE DRAWING ON THIS PRINT AND INFORMATION THEREWITH ARE PROPRIETARY TO MOTOROLA AND SHALL NOT BE USED OR DISCUSSED IN WHOLE OR IN PART WITHOUT MOTOROLA'S CONSENT. © COPYRIGHT, MOTOROLA. THIS DOES NOT IMPLY PUBLICATION	B PROJECT NAME REV
	CAD FILE NAME:

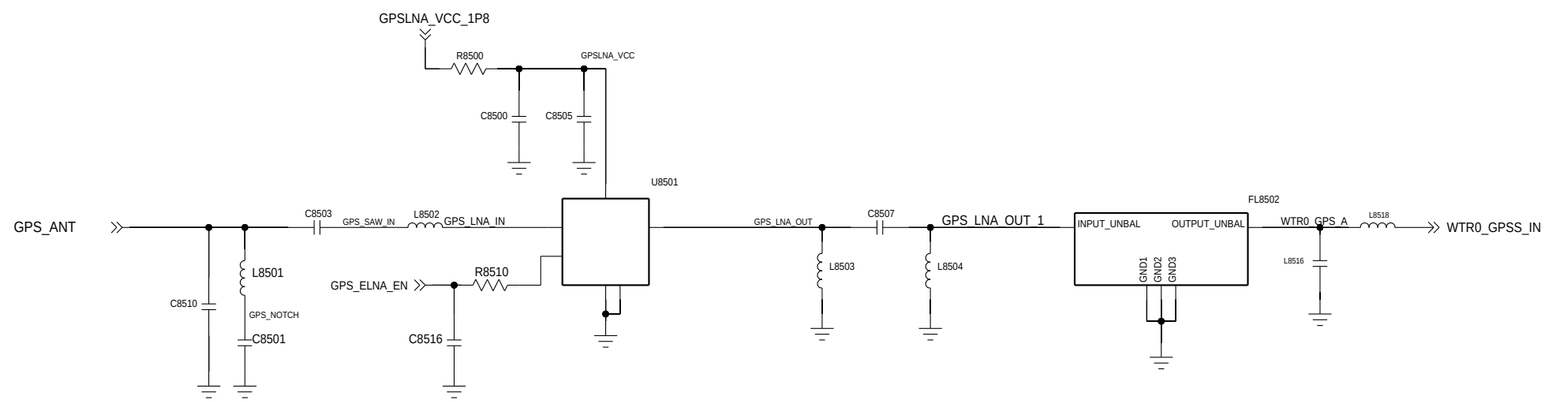

APPROVALS	MOTOROLA MOBILE DEVICES
ENGINEER:	BLOCK TITLE:
LAST MODIFIED BY:	
MOTOROLA CONFIDENTIAL RESTRICTED	B PROJECT NAME REV
THE DRAWING ON THIS PRINT AND INFORMATION THEREWITH ARE PROPRIETARY TO MOTOROLA AND SHALL NOT BE USED OR DISCUSSED IN WHOLE OR IN PART WITHOUT MOTOROLA'S CONSENT.	CAD FILE NAME:

© COPYRIGHT, MOTOROLA. THIS DOES NOT IMPLY PUBLICATION